THE SOUTH AFRICAN NATIONAL BIODIVERSITY INSTITUTE (SANBI)

Contract No: SANBI: NZG412/2022

APPOINTMENT OF A CONTRACTOR FOR THE CONSTRUCTION OF VARIOUS INFRASTRUCTURE PROJECTS, INCLUDING INSTALLATION OF BIOSECURITY MEASURES AND RENOVATIONS TO ANIMAL ENCLOSURES, FOR THE SOUTH AFRICAN NATIONAL BIODIVERSITY INSTITUTE (SANBI) AT THE NATIONAL ZOOLOGICAL GARDEN IN PRETORIA

PROCUREMENT DOCUMENT

JANUARY 2022

Issued by:

The South African National Biodiversity Institute
Private Bag X101
Silverton
0184
Gauteng

Contact:

Supply Chain Management

Tel: 012 843 5000
Fax: N/A
E-mail: sanbi.tenders@sanbi.org.za

Prepared by:

Jendza Capital (Pty) Ltd
Tybalt Place
6 Bates House
Bekker Road
Midrand
2000
Gauteng

Contact:

Mr. A Kapata/ Mr JG Mashele

Tel: 010 824 1360/061 941 4490
Fax: N/A
E-mail: aaron@jendza.co.za / admin@jendza.co.za

Name of tenderer: .....

Address: .....

Tel no.: ..... **Fax no.:** .....

Email : .....

INDEX

PART T TENDER INFORMATION

Part T1 Tendering procedures

T1.1 Tender notice and invitation to tender 3
T1.2 Tender data 4

Part T2 Returnable documents

T2.1 List of returnable documents 23
T2.2 Returnable documents/Schedules 26

PART C THE CONTRACT

Part C1 Agreement and contract data

C1.1 Form of offer and acceptance 73
C1.2 Contract data 78
C1.3 Form of Construction Guarantee 84
C1.4 Occupational Health & Safety Agreement 37(2) 87

Part C2 Pricing data

C2.1 Pricing instructions 91
C2.2 Bill of Quantities 94

Part C3 Scope of works

C3.1 Description of the works 172
C3.2 Design and Construction 175
C3.3 Drawings 176
Annexure A: Set of Drawings *(provided separately)*

Part C4 Site information

C4.1 Site information 177
C4.2 Annexure F: Occupational Health and Safety Specification for Contractors who are on Contract with SANBI 178
C4.3 Annexure G: General Environmental Specification 188
C4.4 Annexure H: Geotechnical Information 195

PART T: TENDER INFORMATION
Part T1: Tendering Procedures

PROJECT TITLE:	APPOINTMENT OF A CONTRACTOR FOR THE CONSTRUCTION OF VARIOUS INFRASTRUCTURE PROJECTS, INCLUDING INSTALLATION OF BIOSECURITY MEASURES AND RENOVATIONS TO ANIMAL ENCLOSURES, FOR THE SOUTH AFRICAN NATIONAL BIODIVERSITY INSTITUTE (SANBI) AT THE NATIONAL ZOOLOGICAL GARDEN IN PRETORIA
CONTRACT NO:	**SANBI: NZG412/2022**

Advertising date:	21 JANUARY 2022	**Closing date:**	18 FEBRUARY 2022
Closing time:	11:00	**Validity period:**	**90 days**

T1.1 Tender Notice and Invitation to Tender

- It is estimated that tenderers should have a **CIDB contractor grading of 6GB or higher**.
- Tender documents will be available as from 21 JANUARY 2022 and will be available ONLINE ONLY on the SANBI website www.sanbi.org (click on “Opportunities”).
- A **compulsory** site briefing session will take place on site on 31 JANUARY 2022 starting from 09:00 at the National Zoological Garden (Pretoria). To comply with the COVID -19 pandemic lockdown social distancing guidelines and protocols, only one representative per service provider will be allowed to attend the scheduled compulsory site briefing session. Bidders are advised that the compulsory briefing session will have three time slots, 09:00 – 10:00, 10:30 – 11:30 and 12:00 – 13:00 with a limited number of attendees at each. Bidders who wish to attend any of the allocated time slots are advised to make a booking with the **Principal Agent**, Mr Aaron Kapata – aaron@jendza.co.za / admin@jendza.co.za . Failure to make a booking will lead to non-entry into the garden. Bidders are encouraged to direct all technical and bidding procedure enquiries to the email addresses below.

Department:	Supply Chain Management
Email:	sanbi.tenders@sanbi.org.za
cc:	aaron@jendza.co.za / admin@jendza.co.za
Cut-off date for enquiries:	**04 FEBRUARY 2022 at 12:00**

Any queries regarding the tender document or any related matter prior to submission of tenders must be directed to:

SANBI Representative (Technical Queries Only)	Aaron Kapata aaron@jendza.co.za / admin@jendza.co.za
SANBI Supply Chain Management:	sanbi.tenders@sanbi.org.za

The closing time and date for the receipt of Tenders is **11:00** on **18 FEBRUARY 2022.**

The Tenders will **NOT** be opened in public (please note that the two-envelope system is being followed). Requirements for sealing, addressing, delivery, opening and assessment of Tenders are stated in the Tender Data.

PART T: TENDER INFORMATION
Part T1: Tendering Procedures

PROJECT TITLE:	APPOINTMENT OF A CONTRACTOR FOR THE CONSTRUCTION OF VARIOUS INFRASTRUCTURE PROJECTS, INCLUDING INSTALLATION OF BIOSECURITY MEASURES AND RENOVATIONS TO ANIMAL ENCLOSURES, FOR THE SOUTH AFRICAN NATIONAL BIODIVERSITY INSTITUTE (SANBI) AT THE NATIONAL ZOOLOGICAL GARDEN IN PRETORIA
CONTRACT NO:	**SANBI: NZG412/2022**

T1.2 Tender Data

The conditions of tender are the Standard Conditions of Tender as contained in Annex C of the CIDB Standard for Uniformity in Engineering and Construction Works Contracts – August 2019. (See www.cidb.org.za).

The Standard Conditions of Tender make several references to the Tender Data for details that apply specifically to this tender. The Tender Data shall have precedence in the interpretation of any ambiguity or inconsistency between it and the Standard Conditions of Tender.

Each item of data given below is cross-referenced to the clause in the Standard Conditions of Tender to which it mainly applies.

Clause number	Tender Data
C.1.1	**The Employer is:** The South African National Biodiversity Institute Biodiversity Centre 2 Cussonia Avenue Brummeria Pretoria Private Bag X101 Silverton 0184
C.1.2	The Tender Documents issued by the Employer comprise the following documents: **PART T: TENDER INFORMATION** **Part T1: Tendering procedures** T1.1 - Tender notice and invitation to tender T1.2 - Tender data **Part T2: Returnable documents** T2.1 - List of returnable documents T2.2 - Returnable documents/Schedules **PART C: THE CONTRACT** **Part C1: Agreements and Contract data** C1.1 - Form of offer and acceptance C1.2 - Contract data C1.3 - Form of Construction Guarantee C1.4 - Occupational Health & Safety Agreement 37(2)

Clause number	Tender Data
	Part C2: Pricing Data C2.1 - Pricing Instructions C2.2 - Bill of Quantities **Part C3: Scope of Works** C3.1 - Description of the works C3.2 - Design and Construction C3.3 - Drawings Annexure A: Set of Drawings *(provided separately)* **Part C4: Site Information** C4.1 - General site information C4.2 - Annexure F: Occupational Health and Safety Specification for Contractors who are on Contract with SANBI C4.3 - Annexure G: General Environmental Specification C4.4 - Annexure H: Geotechnical Information (N/A)
C.1.4	The employer's agent is: **Jendza Capital (Pty) Ltd** **Contact Person:** Mr Aaron Kapata **Tel:** 010 824 1360/061 941 4490 **Fax:** N/A **E-mail:** aaron@jendza.co.za / admin@jendza.co.za
C.1.6.1	Contract will be awarded to the tenderer who achieved highest number of evaluation points.
C.1.6.2	A competitive negotiation procedure will not be followed.
C.1.6.3	A two stage-system will be followed.
C.2.1	Only those tenderers who score the minimum score in respect of the quality criteria stated in C.3.11.1 of this Tender Data shall be considered responsive and have their tenders evaluated further. (a) CIDB registration Only those tenderers who are registered with the CIDB or are capable of being so prior to the evaluation of submissions, in a contractor grading designation equal to or higher than a contractor grading designation determined in accordance with the sum tendered, or a value determined in accordance with Regulation 25 (1B) or 25(7A) of the Construction Industry Development Regulations, for a **6GB** class of construction work, are eligible to have their tenders evaluated. Joint ventures are eligible to submit tenders provided that: 1. every member of the joint venture is registered with the CIDB. 2. the lead partner has a contractor grading designation in the **6GB** class of construction work; and the combined contractor grading designation calculated in accordance with the Construction Industry Development Regulations is equal to or higher than a contractor grading designation determined in accordance with the sum tendered for a **6GB** class of construction work or a value determined in accordance with Regulation 25 (1B) or 25(7A) of the Construction Industry Development Regulations. (b) National Treasury Central Supplier Database Tenderers who are not registered on the National Treasury Central Supplier Database at close of tender, shall submit a copy of their application of registration, with their tender submission. Tenders received from such tenderers who have not submitted proof of their registration within 21 days after the closing date for tender submissions, will not be considered.

Clause number	Tender Data
C.2.7	The arrangements for a compulsory clarification meeting are as stated in the Tender Notice and Invitation to Tender.
C.2.8	The last date for request for clarifications will be on the 04 February 2022.
C.2.12	Replace contents Alternative offers will not be permitted
C.2.13.6	A two-envelope procedure will be followed as described in clause C.2.13.7.
C.2.13.7	Tenderers shall note the specific requirements for packaging of their tender documents and include only the following: • Financial: 1 original document marked "Original" **including** Form of Offer and Acceptance and Priced Bills of Quantities; and • Technical: 1 original document **excluding** Form of Offer and Acceptance and Priced Bill of Quantities, Priced local content declaration and annexures INCLUSION OF ANY PRICING INFORMATION ANYWHERE IN THE COPY WILL LEAD TO THE BID BEING DISQUALIFIED. The original document will be placed in one envelope and the one copy will be placed in another envelope. The two envelopes shall be placed together in an outer envelope sealed and bearing the following: • The address as stated in C.2.15.1 below • The identification details as stated in C.2.15.1 below • Name of the Tenderer • The words "Not be opened before the Tender opening" The technical and financial envelopes should also contain the details of the last three bullets on them. The financial envelope must contain the words NOT TO BE OPENED WITH THE TECHNICAL ENVELOPE.
C.2.13.9	Telephonic, telegraphic, telex, facsimile or e-mailed tender offers will not be accepted.
C.2.15.1	The Employer's address for delivery of tender offers and identification details to be shown on each tender offer package are: Location of Tender box: Biodiversity Centre, Pretoria National Botanical Garden, 2 Cussonia Ave, Brummeria, Pretoria, Gauteng Province Identification details: Tender number: SANBI: NZG412/2022 Title of Tender: APPOINTMENT OF A CONTRACTOR FOR THE CONSTRUCTION OF VARIOUS CONSTRUCTION PROJECTS, INCLUDING INSTALLATION OF BIOSECURITY MEASURES AND RENOVATIONS TO MAMMAL ENCLOSURES, FOR THE SOUTH AFRICAN NATIONAL BIODIVERSITY INSTITUTE (SANBI) AT THE NATIONAL ZOOLOGICAL GARDEN IN PRETORIA
C.2.15.2	The closing time for submission of tender offers is as stated in the Tender Notice and Invitation to Tender.
C.2.16.1	The tender offer validity period is **90** days.

Clause number	Tender Data
C2.16.3	Where a tenderer, at any time after the opening of his tender offer but prior to entering into a contract based on his tender offer: (1) withdraws his tender. (2) gives notice of his inability to execute the contract in terms of his tender; or (3) fails to comply with a request made in terms of C.2.17 or C.2.18 such tenderer shall be barred from tendering on any of the Employer's future tenders for a period to be determined by the Employer, but not less than six (6) months, from the date of tender closure. The Employer may fully or partly exempt a tenderer from the provisions of this condition if he is of the opinion that the circumstances justify the exemption
C.2.17	Provide clarification of a tender offer to a request to do so from the employer during the evaluation of tender offers.
C.2.18	Any additional information requested under this clause must be provided within 5 working days of the date of request. The tenderer shall, when requested by the Employer to do so, submit the names of all management and supervisory staff that will be employed to supervise the Labour-Intensive portion of the works together with satisfactory evidence that such staff members satisfy the eligibility requirements
C.2.22	Tender Documents will **not be returned** to tenderers
C.2.23	The Tenderer is required to submit with his Tender the following **(failure to provide below documentation will result in the Tender being rejected)**: **1)** A copy of the Central Suppliers Database (CSD) registration report or registration number. **2)** A printed copy of the Active Contractor's Listing off the CIDB website (www.cidb.org.za). **3)** UIF compliance demonstrated by submission of one of the following: • A valid copy of the UIF Letter of Compliance issued by the Department of Labour, or • Labour uFiling Employer Statement of Account indicating UIF payments or accruals not older than 12 months, or • SARS eFiling Employer Statement of Account indicating UIF payments or accruals not older than 12 months, or • Valid proof of exemption for UIF. **4)** Letter of Good Standing from the Office of the Compensation Commissioner as required by the Compensation for Occupational Injuries and Diseases Act (COIDA). The letter should be issued by the Department of Labour. **5)** A valid certified copy of original Broad-Based Black Economic Empowerment **(B-BBEE) Status Level 1 certificate or a sworn affidavit**. Note that for this Tender, the following pre-qualification criterion for preferential procurement will be applied: Section 4(1) a Tenderer having a **B-BBEE Status Level of Contributor Level 1.** 1) Certificate or a sworn affidavit 2) Include in the Tender submission or provide the Employer with any certificates as stated in the Tender Data. 3) In case of a Joint Venture, bidders are required to submit a consolidated B-BBEE certificate or sworn affidavit, as well as a joint venture agreement that clearly outlines each party's percentage involvement or role. 4) In the case of a Joint Venture/Consortium the tax Compliance status Pin must be submitted for each member of the Joint Venture/Consortium."
C.3.1.1	The Employer shall respond to clarifications received up to 7 working days before the tender closing time.
C.3.2	The Employer shall issue addenda until 5 working days before the tender closing time.
C.3.5.1	The two-envelope system will be followed for this Tender.
C.3.7	In the event of disqualification, the Employer may, at his sole discretion, impose a specified period during which tender offers will not be accepted from the offending tenderer and report same to the CIDB and National Treasury.
C.3.11.1	The procedure for the evaluation of responsive tenders is stated in **Annexure A**.

Clause number	Tender Data
C.3.13	Tender offers will only be accepted if: a) the tenderer submits a copy of the CSD registration report or registration number (refer to T2.1.13); b) the tenderer is registered with the Construction Industry Development Board in an appropriate contractor grading designation (refer to T2.1.12); c) the tenderer or any of its directors/shareholders is not listed on the Register of Tender Defaulters in terms of the Prevention and Combating of Corrupt Activities Act of 2004 as a person prohibited from doing business with the public sector (refer to SBD 8); d) the tenderer has not (refer to SBD 8): a. abused the Employer's Supply Chain Management System; or b. failed to perform on any previous contract and has been given a written notice to this effect; e) the tenderer has completed the Compulsory Enterprise Questionnaire and there are no conflicts of interest which may impact on the tenderer's ability to perform the contract in the best interests of the employer or potentially compromise the tender process and persons in the employ of the state are permitted to submit tenders or participate in the contract (refer to T2.1.16); f) the tenderer is registered and in good standing with the compensation fund issued by the Department of Labour (Letter of good standing with COIDA); g) the employer is reasonably satisfied that the tenderer has in terms of the Construction Regulations, 2014, issued in terms of the Occupational Health and Safety Act, 1993, the necessary competencies and resources to carry out the work safely (refer to T2.1.17). h) A copy of Tax Compliance Status Pin i) UIF compliance is demonstrated by submission of one of the following: a. A valid copy of the UIF Letter of Compliance issued by the Department of Employment and Labour, or b. Labour uFiling Employer Statement of Account indicating UIF payments or accruals not older than 12 months, or c. SARS eFiling Employer Statement of Account indicating UIF payments or accruals not older than 12 months, or d. Valid proof of exemption for UIF j) A valid certified copy of original Broad-Based Black Economic Empowerment (B-BBEE) Status Level 1 certificate or a sworn affidavit. Note that for this Tender, the following pre-qualification criterion for preferential procurement will be applied: Section 4(1) a **Tenderer having a B-BBEE Status Level of Contributor Level 1.**

Annexure A

This annexure contains all the criteria that the Employer shall use to evaluate tenders. In accordance with clause C.3.11 of the Standard conditions of tender. No other factors, methods or criteria shall be used. The tenderer shall provide all the information requested in the forms included in Part T2.2 – Returnable schedules.

Tenders shall be evaluated in three stages as follows

- Stage 1 – Evaluation of Eligibility and Administrative compliance
- Stage 2 – Evaluation of Functionality
- Stage 3 – Evaluation of Tender Price and Preference

1 Stage 1: Eligibility and Administrative compliance

The first stage will determine whether bids are compliant with all mandatory and disqualifiable submission requirements. Bidders that are deemed compliant will be eligible for further evaluation.

The criteria as identified in Clauses C.2.23 and C.3.13 in the Tender Data will be used to determine the tenders' eligibility.

For administrative compliance, the tenderers must complete all the returnable forms in Part T2.2, the Bill of Quantities, and the Offer section in Part C1.1.

2 Stage 2: Functionality

The tenderers who complied with the eligibility and administrative criteria in stage 1 are considered for further evaluation on their capability to execute the project.

In this stage tenderers, will be evaluated on functionality according to the criteria listed below. Tenderers who fail to score a minimum of 70 points out of a possible 100 points on functionality criteria will not be eligible for further consideration.

Scoring quality

The functionality (quality) evaluation criteria are listed below. Maximum points for each criterion are in bold while points for each sub-criterion are indicated in brackets.

FUNCTIONALITY CRITERIA		
ID	**CRITERIA**	**POINTS**
1	**Implementation method and project plan or programme** • Method to be followed in delivering this project • Realistic Implementation Plan with Timeframes	**30** (20) (10)
2	**Contractor's Experience** • List three projects with similar scope of work completed with completion certificate attached in the last five years 1. Each Completion Certificate is equivalent to **5 points** • Provide four reference letters on the Client's Letterhead of similar value or higher for both past and current projects. 1. Each positive Reference letter is equivalent to **5 Points**	**35** (15) (20)

3	**Contractor's Capability – Personnel** Proposed personnel: 1. Site Agent 2. Health and Safety Personnel 3. Construction Manager / Supervisor • CVs for proposed key personnel **(As above)** indicating: o Previous work experience o Total number of years' working experience in construction o Individual experience of similar work in last five years	**35** (25)
	Note: Each CV with 10 years or more experience will receive a maximum of 10 points. o Qualifications or artisan's certification or other recognised training courses completed o Membership of professional bodies or guilds (e.g. SACPCMP / ECSA) (5 Points)	(5)
	• Availability of Plant & Equipment o Equipment owned by Contractor (Proof of Registration papers) or o Equipment to be rented (if any) (Letter of Intent from the Supplier) – with preferred rental companies **(5 points)**	(5)
TOTAL		**100**

Sub-Criteria	Points
Combined CV experience of less than 5 years	5
Combined CV experience of 5 years or more	10
Combined CV experience of 10 years or more	15
Combined CV experience of 15 years or more	20
Combined CV experience of 20 years or more	25

Functionality shall be scored by not less than three evaluators in accordance with the following schedules:

Each evaluation criterion will be assessed in terms of five indicators – no response, poor, satisfactory, acceptable, good and very good. Scores ranging from of 0 to 5 will be allocated to no response, very poor, poor, acceptable, good and very good responses, respectively. The scores submitted by each of the evaluators will be averaged, weighted and then totalled to obtain the final score for functionality. The prompts for judgment and the associated scores used in the evaluation of quality shall be as follows:

Score	Prompt for judgement
0	Failed to address the question / issue
1	Very poor response: - response / answer / solution lacks convincing evidence of skill / experience sought or medium risk that relevant skills will not be available.

2	Poor response – some elements of the response / answer / solution are present but documentary evidence is mostly lacking in respect of the required information
3	Acceptable response / answer / solution to the particular aspect of the requirements and evidence given of skill / experience sought
4	Above acceptable - response / answer / solution demonstrating real understanding of requirements and evidence of ability to meet it.
5	Excellent - response / answer / solution provides confidence that the tenderer will add real value to the project.

The minimum number of evaluation points for functionality proposal is 70 points in order to progress to stage 3 of the evaluation

3 Stage 3: Tender Price and Preference

The tenderers who complied with the functionality criteria in stage 2 are considered for further evaluation in terms of their Tender Price and Preference points.

3.1 Calculation of score for Tender Price

The score for Tender Price shall be calculated using the following formula:

$$N_F = W_f \times \left[1 - \left(\frac{P_t - P_{min}}{P_{min}}\right)\right]$$

Where:

N_F = the score for Tender Price awarded for the tender under consideration

W_f = the weighting given to financial offer, determined as follows:

- 90 where the Tender Price, inclusive of VAT, of all responsive tender offers received has a value in excess of R50 000 000,00; or
- 80 where the Tender Price, inclusive of VAT, of one or more responsive tender offers has a value that equals or is less than R50 000 000,00.

P_t = Tender Price of the tender under consideration

P_{min} = Tender Price of the lowest responsive tender

In the event that the calculated value of N_F is negative, the allocated score shall be 0

3.2 Calculation of Preference points

Up to 100 minus W_f tender evaluation points will be awarded to tenderers who submit responsive tenders and who are found to be eligible for the preference claimed. Points are based on a tenderer's scorecard measured in terms of the Broad-Based Black Economic Empowerment Act (B-BBEE, Act 53 of 2003) and the Regulations (2017) to the Preferential Procurement Policy Framework Act (PPPFA, Act 5 of 2000).

Points awarded will be according to a tenderer's B-BBEE status level of contributor and summarised in the table below:

B-BBEE Status Level of contributor	Qualification	Number of Points for Contract value up to R50 000 000	Number of Points for Contract Value above R50 000 000
1	≥ 100 points	20	10

2	≥ 85 but < 100 points	18	9
3	≥ 75 but < 85 points	14	6
4	≥ 65 but < 75 points	12	5
5	≥ 55 but < 65 points	8	4
6	≥ 45 but < 55 points	6	3
7	≥ 40 but < 45 points	4	2
8	≥ 30 but < 40 points	2	1
Non-compliant Contributor	< 30 points	0	0

Eligibility for preference points is subject to the following conditions:

(1) A tenderer's scorecard shall be based on the Construction Sector Codes of Practice promulgated in Government Gazette 32305 of 5 June 2009, only if such certificate has been issued before 17 February 2016, alternatively a B-BBEE Certificate issued in accordance with the revised Notice of Clarification published in Notice 444 of 2015 of Government Gazette No.38799 on 15 May 2015 by the Department of Trade and Industry; and
(1) The scorecard shall be submitted as a certificate attached to Returnable Schedule Form T2.1.06; and
(2) The certificate shall:

  (a) be an original or an original certified copy of the original; and
  (b) have been issued by a verification agency accredited by the South African National Accreditation System (SANAS); or
  (c) have been issued by a registered auditor approved by the Independent Regulatory Board of Auditors (IRBA), and

(3) The Verification Certificate must be valid at the tender closing date; and
(4) The date of issue of the certificate must be less than 12 (twelve) months prior to the advertised tender closing date (see Tender Data C.2.15.2); and
(5) Compliance with any other information requested to be attached to Form T2.1.06; and
(6) If a tenderer claims a preference score without submitting an acceptable verification certificate, a period of 24 hours will be granted to submit an acceptable verification certificate which was valid at date of tender closure; and
(7) Failure to submit a valid verification certificate will result in the award of 0 (zero) points for preference; and
(8) In the event of a joint venture (JV), a consolidated B-BBEE verification certificate in the name of the JV shall be submitted.

3.3 Financial and Preference

After calculation of the scores for Tender Price and for Preference, a combined score will be calculated as follows:

NT = NF + NP

Where:

NT = Total score for tender under consideration

NF = Score for Tender Price

NP = Score for Preference

The tender with the highest score should be recommended for appointment.

Annexure B

Standard Conditions of Tender

C.1 General

C.1.1 Actions

C.1.1.1 The employer and each tenderer submitting a tender offer shall comply with these conditions of tender. In their dealings with each other, they shall discharge their duties and obligations as set out in C.2 and C.3, timeously and with integrity, and behave equitably, honestly and transparently, comply with all legal obligations and not engage in anticompetitive practices.

C.1.1.2 The employer and the tenderer and all their agents and employees involved in the tender process shall avoid conflicts of interest and where a conflict of interest is perceived or known, declare any such conflict of interest, indicating the nature of such conflict. Tenderers shall declare any potential conflict of interest in their tender submissions. Employees, agents and advisors of the employer shall declare any conflict of interest to whoever is responsible for overseeing the procurement process at the start of any deliberations relating to the procurement process or as soon as they become aware of such conflict and abstain from any decisions where such conflict exists or recuse themselves from the procurement process, as appropriate.

Note:

1) A conflict of interest may arise due to a conflict of roles which might provide an incentive for improper acts in some circumstances. A conflict of interest can create an appearance of impropriety that can undermine confidence in the ability of that person to act properly in his or her position even if no improper acts result.

2) Conflicts of interest in respect of those engaged in the procurement process include direct, indirect or family interests in the tender or outcome of the procurement process and any personal bias, inclination, obligation, allegiance or loyalty which would in any way affect any decisions taken.

C.1.1.3 The employer shall not seek, and a tenderer shall not submit a tender without having a firm intention and the capacity to proceed with the contract.

C.1.2 Tender Documents

The documents issued by the employer for the purpose of a tender offer are listed in the tender data.

C.1.3 Interpretation

C.1.3.1 The tender data and additional requirements contained in the tender schedules that are included in the returnable documents are deemed to be part of these conditions of tender.

C.1.3.2 These conditions of tender, the tender data and tender schedules which are required for tender evaluation purposes, shall form part of any contract arising from the invitation to tender.

C.1.3.3 For the purposes of these conditions of tender, the following definitions apply:

a) **conflict of interest** means any situation in which:

i) someone in a position of trust has competing professional or personal interests which make it difficult to fulfill his or her duties impartially;

ii) an individual or tenderer is in a position to exploit a professional or official capacity in some way for their personal or corporate benefit; or

iii) incompatibility or contradictory interests exist between an employee and the tenderer who employs that employee.

b) **comparative offer** means the price after the factors of a non-firm price and all unconditional discounts it can be utilised to have been taken into consideration;

c) **corrupt practice** means the offering, giving, receiving or soliciting of anything of value to influence the action of the employer or his staff or agents in the tender process;

d) **fraudulent practice** means the misrepresentation of the facts in order to influence the tender process or the award of a contract arising from a tender offer to the detriment of the employer, including collusive practices intended to establish prices at artificial levels;

C.1.4 Communication and employer's agent

Each communication between the employer and a tenderer shall be to or from the employer's agent only, and in a form that can be readily read, copied and recorded. Communications shall be in the English language. The employer shall not take any responsibility for non-receipt of communications from or by a tenderer. The name and contact details of the employer's agent are stated in the tender data.

C.1.5 Cancellation and Re-Invitation of Tenders

C.1.5.1 An employer may, prior to the award of the tender, cancel a tender if-

a) due to changed circumstances, there is no longer a need for the engineering and construction works specified in the invitation;

b) funds are no longer available to cover the total envisaged expenditure; or

c) no acceptable tenders are received.

d) there is a material irregularity in the tender process.

C.1.5.2 The decision to cancel a tender invitation must be published in the same manner in which the original tender invitation was advertised

C.1.5.3 An employer may only with the prior approval of the relevant treasury cancel a tender invitation for the second time.

C.1.6 Procurement procedures

C.1.6.1 General

Unless otherwise stated in the tender data, a contract will, subject to C.3.13, be concluded with the tenderer who in terms of C.3.11 is the highest ranked or the tenderer scoring the highest number of tender evaluation points, as relevant, based on the tender submissions that are received at the closing time for tenders.

C.1.6.2 Competitive negotiation procedure

C.1.6.2.1 Where the tender data require that the competitive negotiation procedure is to be followed, tenderers shall submit tender offers in response to the proposed contract in the first round of submissions. Notwithstanding the requirements of C.3.4, the employer shall announce only the names of the tenderers who make a submission. The requirements of C.3.8 relating to the material deviations or qualifications which affect the competitive position of tenderers shall not apply.

C.1.6.2.2 All responsive tenderers or at least a minimum of not less than three responsive tenderers that are highest ranked in terms of the evaluation criteria stated in the tender data shall be invited to enter into competitive negotiations based on the principle of equal treatment, keeping confidential the proposed solutions and associated information.

Notwithstanding the provisions of C.2.17, the employer may request that tenders be clarified, specified and fine-tuned in order to improve a tenderer's competitive position provided that such clarification, specification, fine-tuning or additional information does not alter any fundamental aspects of the offers or impose substantial new requirements which restrict or distort competition or have a discriminatory effect.

C.1.6.2.3 At the conclusion of each round of negotiations, tenderers shall be invited by the employer to revise their tender offer based on the same evaluation criteria, with or without adjusted weightings. Tenderers shall be advised when they are to submit their best and final offer.

C.1.6.2.4 The contract shall be awarded in accordance with the provisions of C.3.11 and C.3.13 after tenderers have been requested to submit their best and final offer.

C.1.6.3 Proposal procedure using the two stage-system

C.1.6.3.1 Option 1

Tenderers shall in the first stage submit technical proposals and, if required, cost parameters around which a contract may be negotiated. The employer shall evaluate each responsive submission in terms of the method of evaluation stated in the tender data, and in the second stage negotiate a contract with the tenderer scoring the highest number of evaluation points and award the contract in terms of these conditions of tender.

C.1.6.3.2 Option 2

C.1.6.3.2.1 Tenderers shall submit in the first stage only technical proposals. The employer shall invite all responsive tenderers to submit tender offers in the second stage, following the issuing of procurement documents.

C.1.6.3.2.2 The employer shall evaluate tenders received during the second stage in terms of the method of evaluation stated in the tender data and award the contract in terms of these conditions of tender.

C.2 Tenderer's obligations

C.2.1 Eligibility

C.2.1.1 Submit a tender offer only if the tenderer satisfies the criteria stated in the tender data and the tenderer, or any of his principals, is not under any restriction to do business with employer.

C.2.1.2 Notify the employer of any proposed material change in the capabilities or formation of the tendering entity (or both) or any other criteria which formed part of the qualifying requirements used by the employer as the basis in a prior process to invite the tenderer to submit a tender offer and obtain the employer's written approval to do so prior to the closing time for tenders.

C.2.2 Cost of tendering

C.2.2.1 Accept that, unless otherwise stated in the tender data, the employer will not compensate the tenderer for any costs incurred in the preparation and submission of a tender offer, including the costs of any testing necessary to demonstrate that aspects of the offer complies with requirements.

C.2.2.2 The cost of the tender documents charged by the employer shall be limited to the actual cost incurred by the employer for printing the documents. Employers must attempt to make available the tender documents on its website so as not to incur any costs pertaining to the printing of the tender documents.

C.2.3 Check documents

Check the tender documents on receipt for completeness and notify the employer of any discrepancy or omission.

C.2.4 Confidentiality and copyright of documents

Treat as confidential all matters arising in connection with the tender. Use and copy the documents issued by the employer only for the purpose of preparing and submitting a tender offer in response to the invitation.

C.2.5 Reference documents

Obtain, as necessary for submitting a tender offer, copies of the latest versions of standards, specifications, conditions of contract and other publications, which are not attached but which are incorporated into the tender documents by reference.

C.2.6 Acknowledge addenda

Acknowledge receipt of addenda to the tender documents, which the employer may issue, and if necessary, apply for an extension to the closing time stated in the tender data, in order to take the addenda into account.

C.2.7 Clarification meeting

Attend, where required, a clarification meeting at which tenderers may familiarize themselves with aspects of the proposed work, services or supply and raise questions. Details of the meeting(s) are stated in the tender data.

C.2.8 Seek clarification

Request clarification of the tender documents, if necessary, by notifying the employer at least five (5) working days before the closing time stated in the tender data.

C.2.9 Insurance

Be aware that the extent of insurance to be provided by the employer (if any) might not be for the full cover required in terms of the conditions of contract identified in the contract data. The tenderer is advised to seek qualified advice regarding insurance.

C.2.10 Pricing the tender offer

C.2.10.1 Include in the rates, prices, and the tendered total of the prices (if any) all duties, taxes except Value Added Tax (VAT), and other levies payable by the successful tenderer, such duties, taxes and levies being those applicable fourteen (14) days before the closing time stated in the tender data.

C.2.10.2 Show VAT payable by the employer separately as an addition to the tendered total of the prices.

C.2.10.3 Provide rates and prices that are fixed for the duration of the contract and not subject to adjustment except as provided for in the conditions of contract identified in the contract data.

C.2.10.4 State the rates and prices in Rand unless instructed otherwise in the tender data. The conditions of contract identified in the contract data may provide for part payment in other currencies.

C.2.11 Alterations to documents

Do not make any alterations or additions to the tender documents, except to comply with instructions issued by the employer, or necessary to correct errors made by the tenderer. All signatories to the tender offer shall initial all such alterations.

C.2.12 Alternative tender offers

C.2.12.1 Unless otherwise stated in the tender data, submit alternative tender offers only if a main tender offer, strictly in accordance with all the requirements of the tender documents, is also submitted as well as a schedule that compares the requirements of the tender documents with the alternative requirements that are proposed.

C.2.12.2 Accept that an alternative tender offer must be based only on the criteria stated in the tender data or criteria otherwise acceptable to the employer.

C.2.12.3 An alternative tender offer must only be considered if the main tender offer is the winning tender.

C.2.13 Submitting a tender offer

C.2.13.1 Submit one tender offer only, either as a single tendering entity or as a member in a joint venture to provide the whole of the works identified in the contract data and described in the scope of works, unless stated otherwise in the tender data.

C.2.13.2 Return all returnable documents to the employer after completing them in their entirety, either electronically (if they were issued in electronic format) or by writing legibly in non-erasable ink.

C.2.13.3 Submit the parts of the tender offer communicated on paper as an original plus the number of copies stated in the tender data, with an English translation of any documentation in a language other than English, and the parts communicated electronically in the same format as they were issued by the employer.

C.2.13.4 Sign the original and all copies of the tender offer where required in terms of the tender data. The employer will hold all authorized signatories liable on behalf of the tenderer. Signatories for tenderers proposing to contract as joint ventures shall state which of the signatories is the lead partner whom the employer shall hold liable for the purpose of the tender offer.

C.2.13.5 Seal the original and each copy of the tender offer as separate packages marking the packages as "ORIGINAL" and "COPY". Each package shall state on the outside the employer's address and identification details stated in the tender data, as well as the tenderer's name and contact address.

C.2.13.6 Where a two-envelope system is required in terms of the tender data, place and seal the returnable documents listed in the tender data in an envelope marked “financial proposal” and place the remaining returnable documents in an envelope marked “technical proposal”. Each envelope shall state on the outside the employer’s address and identification details stated in the tender data, as well as the tenderer's name and contact address.

C.2.13.7 Seal the original tender offer and copy packages together in an outer package that states on the outside only the employer's address and identification details as stated in the tender data.

C.2.13.8 Accept that the employer will not assume any responsibility for the misplacement or premature opening of the tender offer if the outer package is not sealed and marked as stated.

C.2.13.9 Accept that tender offers submitted by facsimile or e-mail will be rejected by the employer, unless stated otherwise in the tender data.

C.2.14 Information and data to be completed in all respects

Accept that tender offers, which do not provide all the data or information requested completely and, in the form required, may be regarded by the employer as non-responsive.

C.2.15 Closing time

C.2.15.1 Ensure that the employer receives the tender offer at the address specified in the tender data not later than the closing time stated in the tender data. Accept that proof of posting shall not be accepted as proof of delivery.

C.2.15.2 Accept that, if the employer extends the closing time stated in the tender data for any reason, the requirements of these conditions of tender apply equally to the extended deadline.

C.2.16 Tender offer validity

C.2.16.1 Hold the tender offer(s) valid for acceptance by the employer at any time during the validity period stated in the tender data after the closing time stated in the tender data.

C.2.16.2 If requested by the employer, consider extending the validity period stated in the tender data for an agreed additional period with or without any conditions attached to such extension.

C.2.16.3 Accept that a tender submission that has been submitted to the employer may only be withdrawn or substituted by giving the employer’s agent written notice before the closing time for tenders that a tender is to be withdrawn or substituted. If the validity period stated in C.2.16 lapses before the employer evaluating tender, the contractor reserves the right to review the price based on Consumer Price Index (CPI).

C.2.16.4 Where a tender submission is to be substituted, a tenderer must submit a substitute tender in accordance with the requirements of C.2.13 with the packages clearly marked as “SUBSTITUTE”.

C.2.17 Clarification of tender offer after submission

Provide clarification of a tender offer in response to a request to do so from the employer during the evaluation of tender offers. This may include providing a breakdown of rates or prices and correction of arithmetical errors by the adjustment of certain rates or item prices (or both). No change in the competitive position of tenderers or substance of the tender offer is sought, offered, or permitted.

Note: *Sub-clause C.2.17 does not preclude the negotiation of the final terms of the contract with a preferred tenderer following a competitive selection process, should the Employer elect to do so.*

C.2.18 Provide other material

C.2.18.1 Provide, on request by the employer, any other material that has a bearing on the tender offer, the tenderer's commercial position (including notarized joint venture agreements), preferencing arrangements, or samples of materials, considered necessary by the employer for the purpose of a full and fair risk assessment.

Should the tenderer not provide the material, or a satisfactory reason as to why it cannot be provided, by the time for submission stated in the employer's request, the employer may regard the tender offer as non-responsive.

C.2.18.2 Dispose of samples of materials provided for evaluation by the employer, where required.

C.2.19 Inspections, tests and analysis

Provide access during working hours to premises for inspections, tests and analysis as provided for in the tender data.

C.2.20 Submit securities, bonds and policies

If requested, submit for the employer's acceptance before formation of the contract, all securities, bonds, guarantees, policies and certificates of insurance required in terms of the conditions of contract identified in the contract data.

C.2.21 Check final draft

Check the final draft of the contract provided by the employer within the time available for the employer to issue the contract.

C.2.22 Return of other tender documents

If so instructed by the employer, return all retained tender documents within twenty-eight (28) days after the expiry of the validity period stated in the tender data.

C.2.23 Certificates

Include in the tender submission or provide the employer with any certificates as stated in the tender data.

C.3 The employer's undertakings

C.3.1 Respond to requests from the tenderer

C.3.1.1 Unless otherwise stated in the tender Data, respond to a request for clarification received up to five (5) working days before the tender closing time stated in the Tender Data and notify all tenderers who collected tender documents.

C.3.1.2 Consider any request to make a material change in the capabilities or formation of the tendering entity (or both) or any other criteria which formed part of the qualifying requirements used to prequalify a tenderer to submit a tender offer in terms of a previous procurement process and deny any such request if as a consequence:

a) an individual firm, or a joint venture as a whole, or any individual member of the joint venture fails to meet any of the collective or individual qualifying requirements;

b) the new partners to a joint venture were not prequalified in the first instance, either as individual firms or as another joint venture; or

c) in the opinion of the Employer, acceptance of the material change would compromise the outcome of the prequalification process.

C.3.2 Issue Addenda

If necessary, issue addenda that may amend or amplify the tender documents to each tenderer during the period from the date that tender documents are available until three (3) working days before the tender closing time stated in the Tender Data. If, as a result a tenderer applies for an extension to the closing time stated in the Tender Data, the Employer may grant such extension and, shall then notify all tenderers who collected tender documents.

C.3.3 Return late tender offers

Return tender offers received after the closing time stated in the Tender Data, unopened, (unless it is necessary to open a tender submission to obtain a forwarding address), to the tenderer concerned.

C.3.4 Opening of tender submissions

C.3.4.1 Unless the two-envelope system is to be followed, open valid tender submissions in the presence of tenderers' agents who choose to attend at the time and place stated in the tender data. Tender submissions for which acceptable reasons for withdrawal have been submitted will not be opened.

C.3.4.2 Announce at the meeting held immediately after the opening of tender submissions, at a venue indicated in the tender data, the name of each tenderer whose tender offer is opened and, where applicable, the total of his prices, number of points claimed for its BBBEE status level and time for completion for the main tender offer only.

C.3.4.3 Make available the record outlined in C.3.4.2 to all interested persons upon request.

C.3.5 Two-envelope system

C.3.5.1 Where stated in the tender data that a two-envelope system is to be followed, open only the technical proposal of valid tenders in the presence of tenderers' agents who choose to attend at the time and place stated in the tender data and announce the name of each tenderer whose technical proposal is opened.

C.3.5.2 Evaluate functionality of the technical proposals offered by tenderers, then advise tenderers who remain in contention for the award of the contract of the time and place when the financial proposals will be opened. Open only the financial proposals of tenderers, who score in the functionality evaluation more than the minimum number of points for functionality stated in the tender data, and announce the score obtained for the technical proposals and the total price and any points claimed on BBBEE status level.

C.3.6 Non-disclosure

Not disclose to tenderers, or to any other person not officially concerned with such processes, information relating to the evaluation and comparison of tender offers, the final evaluation price and recommendations for the award of a contract, until after the award of the contract to the successful tenderer.

C.3.7 Grounds for rejection and disqualification

Determine whether there has been any effort by a tenderer to influence the processing of tender offers and instantly disqualify a tenderer (and his tender offer) if it is established that he engaged in corrupt or fraudulent practices.

C.3.8 Test for responsiveness

C.3.8.1 Determine, after opening and before detailed evaluation, whether each tender offer properly received:

a) complies with the requirements of these Conditions of Tender,

b) has been properly and fully completed and signed, and

c) is responsive to the other requirements of the tender documents.

C.3.8.2 A responsive tender is one that conforms to all the terms, conditions, and specifications of the tender documents without material deviation or qualification. A material deviation or qualification is one which, in the Employer*'s* opinion, would:

a) detrimentally affect the scope, quality, or performance of the works, services or supply identified in the Scope of Work*,*

b) significantly change the Employer*'s* or the tenderer's risks and responsibilities under the contract, or

c) affect the competitive position of other tenderers presenting responsive tenders, if it were to be rectified.

Reject a non-responsive tender offer, and not allow it to be subsequently made responsive by correction or withdrawal of the non-conforming deviation or reservation.

C.3.9 Arithmetical errors, omissions and discrepancies

C.3.9.1 Check responsive tenders for discrepancies between amounts in words and amounts in figures. Where there is a discrepancy between the amounts in figures and the amount in words, the amount in words shall govern.

C.3.9.2 Check the highest ranked tender or tenderer with the highest number of tender evaluation points after the evaluation of tender offers in accordance with C.3.11 for:

a) the gross misplacement of the decimal point in any unit rate;

b) omissions made in completing the pricing schedule or bills of quantities; or

c) arithmetic errors in:

(i) line item totals resulting from the product of a unit rate and a quantity in bills of quantities or schedules of prices; or

(ii) the summation of the prices.

C.3.9.3 Notify the tenderer of all errors or omissions that are identified in the tender offer and either confirm the tender offer as tendered or accept the corrected total of prices.

C.3.9.4 Where the tenderer elects to confirm the tender offer as tendered, correct the errors as follows:

a) If bills of quantities or pricing schedules apply and there is an error in the line item total resulting from the product of the unit rate and the quantity, the line item total shall govern and the rate shall be corrected. Where there is an obviously gross misplacement of the decimal point in the unit rate, the line item total as quoted shall govern, and the unit rate shall be corrected.

b) Where there is an error in the total of the prices either as a result of other corrections required by this checking process or in the tenderer's addition of prices, the total of the prices shall govern, and the tenderer will be asked to revise selected item prices (and their rates if bills of quantities apply) to achieve the tendered total of the prices.

C.3.10 Clarification of a tender offer

Obtain clarification from a tenderer on any matter that could give rise to ambiguity in a contract arising from the tender offer.

C.3.11 Evaluation of tender offers

The Standard Conditions of Tender standardize the procurement processes, methods and procedures from the time that tenders are invited to the time that a contract is awarded. They are generic in nature and are made project specific through choices that are made in developing the Tender Data associated with a specific project.

Conditions of tender are by definition the document that establishes a tenderer’s obligations in submitting a tender and the employer’s undertakings in soliciting and evaluating tender offers. Such conditions establish the rules from the time a tender is advertised to the time that a contract is

awarded and require employers to conduct the process of offer and acceptance in terms of a set of standard procedures.

The CIDB Standard Conditions of Tender are based on a procurement system that satisfies the following system requirements:	
Requirement	**Qualitative interpretation of goal**
Fair	The process of offer and acceptance is conducted impartially without bias, providing simultaneous and timely access to participating parties to the same information.
Equitable	Terms and conditions for performing the work do not unfairly prejudice the interests of the parties.
Transparent	The only grounds for not awarding a contract to a tenderer who satisfies all requirements are restrictions from doing business with the employer, lack of capability or capacity, legal impediments and conflicts of interest.
Competitive	The system provides for appropriate levels of competition to ensure cost effective and best value outcomes.
Cost effective	Cost effective

The activities associated with evaluating tender offers are as follows:

a) Open and record tender offers received

b) Determine whether or not tender offers are complete

c) Determine whether or not tender offers are responsive

d) Evaluate tender offers

e) Determine if there are any grounds for disqualification

f) Determine acceptability of preferred tenderer

g) Prepare a tender evaluation report

h) Confirm the recommendation contained in the tender evaluation report

C.3.11.1 General

The employer must appoint an evaluation panel of not less than three persons conversant with the proposed scope of works to evaluate each responsive tender offer using the tender evaluation methods and associated evaluation criteria and weightings that are specified in the tender data.

C.3.12 Insurance provided by the employer

If requested by the proposed successful tenderer, submit for the tenderer*'s* information the policies and / or certificates of insurance which the conditions of contract identified in the contract data, require the employer to provide.

C.3.13 Acceptance of tender offer

Accept the tender offer; if in the opinion of the employer, it does not present any risk and only if the tenderer:

a) is not under restrictions, or has principals who are under restrictions, preventing participating in the employer's procurement;

b) can, as necessary and in relation to the proposed contract, demonstrate that he or she possesses the professional and technical qualifications, professional and technical competence, financial resources, equipment and other physical facilities, managerial capability, reliability, experience and reputation, expertise and the personnel, to perform the contract;

c) has the legal capacity to enter into the contract;

d) is not; insolvent, in receivership, under Business Rescue as provided for in chapter 6 of the Companies Act No. 2008, bankrupt or being wound up, has his/her affairs administered by a

court or a judicial officer, has suspended his/her business activities or is subject to legal proceedings in respect of any of the foregoing;

e) complies with the legal requirements, if any, stated in the tender data; and

f) is able, in the opinion of the employer, to perform the contract free of conflicts of interest.

C.3.14 Prepare contract documents

C.3.14.1 If necessary, revise documents that shall form part of the contract and that were issued by the employer as part of the tender documents to take account of:

a) addenda issued during the tender period,

b) inclusion of some of the returnable documents and

c) other revisions agreed between the employer and the successful tenderer.

C.3.14.2 Complete the schedule of deviations attached to the form of offer and acceptance, if any.

C.3.15 Complete adjudicator's contract

Unless alternative arrangements have been agreed or otherwise provided for in the contract, arrange for both parties to complete formalities for appointing the selected adjudicator at the same time as the main contract is signed.

C.3.16 Registration of the award

An employer must, within twenty-one (21) working days from the date on which a contractor's offer to perform a construction works contract is accepted in writing by the employer, register and publish the award on the CIDB Register of Projects.

C.3.17 Provide copies of the contracts

Provide to the successful tenderer the number of copies stated in the Tender Data of the signed copy of the contract as soon as possible after completion and signing of the form of offer and acceptance.

C.3.18 Provide written reasons for actions taken

Provide upon request written reasons to tenderers for any action that is taken in applying these conditions of tender but withhold information which is not in the public interest to be divulged, which is considered to prejudice the legitimate commercial interests of tenderers or might prejudice fair competition between tenderers.

PART T 2: Returnable Documents

PROJECT TITLE:	APPOINTMENT OF A CONTRACTOR FOR THE CONSTRUCTION OF VARIOUS INFRASTRUCTURE PROJECTS, INCLUDING INSTALLATION OF BIOSECURITY MEASURES AND RENOVATIONS TO ANIMAL ENCLOSURES, FOR THE SOUTH AFRICAN NATIONAL BIODIVERSITY INSTITUTE (SANBI) AT THE NATIONAL ZOOLOGICAL GARDEN IN PRETORIA
CONTRACT NO:	**SANBI: NZG412/2022**

T2.1 List of Returnable Documents

1. RETURNABLE SCHEDULES REQUIRED FOR TENDER EVALUATION PURPOSES

Tender document name	Number of pages issued	Returnable document
Resolution of Board of Directors (T2.1.01)	1 Page	■ Yes □ No
Resolution of Board of Directors to enter into consortia or JV's (T2.1.02) (If Applicable)	2 Pages	■ Yes □ No
Special Resolution of Consortia or JV's (T2.1.03) (If Applicable)	3 Pages	■ Yes □ No
Schedule of proposed sub-contractors (T2.1.04)	1 Page	■ Yes □ No
Capacity of Tenderer (T2.1.05)	3 Pages	■ Yes □ No
Preference Point System (T2.1.06)	6 Pages	■ Yes □ No
Schedule of Key Personnel (T2.1.07)	1 Pages	■ Yes □ No
Unemployment Insurance Fund (UIF) (T2.1.08)	1 Page	■ Yes □ No
Compensation of Occupational Injuries and Disease Act (COIDA) (T2.1.09)	1 Page	■ Yes □ No

2. OTHER DOCUMENTS REQUIRED FOR TENDER EVALUATION PURPOSES

Tender document name	Number of pages issued	Returnable document
Declaration of Interest (T2.1.10)	2 Pages	■ Yes □ No
Medical Certificate for the confirmation of permanent disabled status (T2.1.11)	1 Page	■ Yes □ No
Proof of registration with Construction Industry Development Board (T2.1.12)	1 Page	■ Yes □ No
Copy of CSD Registration Certificate (T2.1.13)	1 Pages	■ Yes □ No

3. RETURNABLE SCHEDULES THAT WILL BE INCORPORATED INTO THE CONTRACT

Tender document name	Number of pages issued	Returnable document
Record of Addenda to tender documents (T2.1.14)	1 Page	■ Yes □ No
Compulsory Enterprise Questionnaire (T2.1.15)	3 Pages	■ Yes □ No
Declaration certificate for local production and content for designated sectors (SBD 6.2)	8 Pages	■ Yes □ No
Declaration of Bidder's Past Supply Chain Management Practices (SBD 8)	2 Pages	■ Yes □ No
Certificate of Independent Quotation Determination (SBD 9)	3 Pages	■ Yes □ No

4. OTHER DOCUMENTS THAT WILL BE INCORPORATED INTO THE CONTRACT

Tender document name	Number of pages issued	Returnable document
Applicable Form of Guarantee	3 Pages	■ Yes □ No
Priced Bill of Quantities	77 Pages	■ Yes □ No

C1.1 Form of Offer and Acceptance
C1.2 Contract Data
C1.3 Form of Guarantee

RETURNABLE DOCUMENT CHECKLIST

This form has been created as an aid to ensure a tenderer's compliance with the completion of the returnable schedules and subsequent placement in the correct **Technical** and **Financial** envelopes.

A TECHNICAL ENVELOPE (1 COPY)

Reference No	Document Description	Tick if completed
T2.1.01	Resolution of Board of Directors	
T2.1.02	Resolution of Board of Directors to enter into consortia or JV's (If Applicable)	
T2.1.03	Special Resolution of Consortia or JV's (If Applicable)	
T2.1.04	Schedule of proposed sub-contractors	
T2.1.05	Capacity of Tenderer	
T2.1.06	Preference Point System	
T2.1.07	Schedule of Key Personnel	
T2.1.08	Unemployment Insurance Fund (UIF)	
T2.1.09	Compensation of Occupational Injuries and Disease Act (COIDA)	
T2.1.10	Declaration of Interest	
T2.1.11	Medical Certificate for the confirmation of permanent disabled status	
T2.1.12	Proof of registration with Construction Industry Development Board	
T2.1.13	Copy of CSD Registration Certificate	
T2.1.14	Record of Addenda to tender documents	
T2.1.15	Compulsory Enterprise Questionnaire	
SBD 8	Declaration of Bidder's Past Supply Chain Management Practices	
SBD 9	Certificate of Independent Quotation Determination	

B FINANCIAL ENVELOPE (ORIGINAL DOCUMENT)

The entire original tender document must be submitted in this envelope including the forms as listed below:

Reference No	Document Description	Tick if completed
Form C1.1	Form of Offer and Acceptance	
Form C1.2	Contract Data – Part 1	
Form C2.2	Priced Bill of Quantities	
SBD 6.2	Declaration certificate for local production and content for designated sectors	

PART 2: RETURNABLE DOCUMENTS

PROJECT TITLE:	APPOINTMENT OF A CONTRACTOR FOR THE CONSTRUCTION OF VARIOUS INFRASTRUCTURE PROJECTS, INCLUDING INSTALLATION OF BIOSECURITY MEASURES AND RENOVATIONS TO ANIMAL ENCLOSURES, FOR THE SOUTH AFRICAN NATIONAL BIODIVERSITY INSTITUTE (SANBI) AT THE NATIONAL ZOOLOGICAL GARDEN IN PRETORIA
CONTRACT NO:	**SANBI: NZG412/2022**

T2.2 Returnable documents/Schedules

T2.1.01: RESOLUTION OF BOARD OF DIRECTORS

RESOLUTION of a meeting of the Board of *Directors / Members / Partners of:

.....

.....
(*legally correct full name and registration number, if applicable, of the Enterprise)*

Held at ..... (place)

On ..... (date)

RESOLVED that:

1. The Enterprise submits a Bid / Tender to the South African National Biodiversity Institute in respect of the following project:

   .....

   .....
   (*project description as per Bid / Tender Document)*

   Bid / Tender Number: ..... *(Bid / Tender Number as per Bid / Tender Document)*

2. *Mr/Mrs/Ms: .....

   in *his/her Capacity as: ..... *(Position in the Enterprise)*

   and who will sign as follows: .....

   be, and is hereby, authorised to sign the Bid / Tender, and any and all other documents and/or correspondence in connection with and relating to the Bid / Tender, as well as to sign any Contract, and any and all documentation, resulting from the award of the Bid / Tender to the Enterprise mentioned above.

	Name	Capacity	Signature
1			
2			
3			
4			

Note:

1. ** Delete which is not applicable*
2. ***NB**. This resolution must be signed by all the Directors / Members / Partners of the Bidding Enterprise.*
3. *Should the number of Directors / Members/Partners exceed the space available above, additional names and signatures must be supplied on a separate page.*

ENTERPRISE STAMP

T2.1.02: RESOLUTION OF BOARD OF DIRECTORS TO ENTER INTO CONSORTIA OR JOINT VENTURES

RESOLUTION of a meeting of the Board of *Directors / Members / Partners of:

.....

.....
(*Legally correct full name and registration number, if applicable, of the Enterprise)*

Held at ..... (place)

On ..... (date)

RESOLVED that:

1. The Enterprise submits a Bid /Tender, in consortium/Joint Venture with the following Enterprises:

   .....

   .....
   (List all the legally correct full names and registration numbers, if applicable, of the Enterprises forming the Consortium/Joint Venture)

   to the South African National Biodiversity Institute in respect of the following project:

   .....

   .....
   (*Project description as per Bid /Tender Document)*

   Bid / Tender Number: ..... *(Bid / Tender Number as per Bid / Tender Document)*

2. *Mr/Mrs/Ms: .....

   in *his/her Capacity as: .....*(Position in the Enterprise)*

   and who will sign as follows: .....

   be, and is hereby, authorised to sign a consortium/joint venture agreement with the parties listed under item 1 above, and any and all Other documents and/or correspondence in connection with and relating to the consortium/joint venture, in respect of the project described under item 1 above.

3. The Joint Venture formation/arrangement will be in the following proportions:

Name of Contractor	Proportion (%)

4. The Enterprise accepts joint and several liability with the parties listed under item 1 above for the due fulfilment of the obligations of the joint venture deriving from, and in any way connected with, the Contract to be entered into with the Employer in respect of the project described under item 1 above.

5. The Enterprise chooses as its *domicilium citandi et executandi* for all purposes arising from this joint venture agreement and the Contract with the Employer in respect of the project under item 1 above:

   Physical address: .....

   .....

   ..... (code)

   Postal address: .....

   .....

   ..... (code)

   Telephone number: ..... (code)

   Fax number: ..... (code)

	Name	Capacity	Signature
1			
2			
3			
4			
5			
6			
7			
8			
9			
10			

Note:

1. ** Delete which is not applicable.*
2. ***NB**. This resolution must be signed by all the Directors / Members / Partners of the Bidding Enterprise.*
3. *Should the number of Directors / Members / Partners exceed the space available above, additional names and signatures must be supplied on a separate page.`*

ENTERPRISE STAMP

T2.1.03: SPECIAL RESOLUTION OF CONSORTIA OR JOINT VENTURES

RESOLUTION of a meeting of the duly authorised representatives of the following legal entities who have entered into a consortium/joint venture to jointly bid for the project mentioned below: (*legally correct full names and registration numbers, if applicable, of the Enterprises forming a Consortium/Joint Venture)*

1. .....

   .....

2. .....

   .....

3. .....

   .....

4. .....

   .....

5. .....

   .....

6. .....

   .....

7. .....

   .....

8. .....

   .....

Held at ..... (place)

On ..... (date)

RESOLVED that:

A. The above-mentioned Enterprises submit a Bid in Consortium/Joint Venture to the South African National Biodiversity Institute in respect of the following project:

   .....

   .....
   (*Project description as per Bid /Tender Document)*

   Bid / Tender Number: ..... *(Bid / Tender Number as per Bid / Tender Document)*

*Mr/Mrs/Ms: .....

in *his/her Capacity as: ..... *(Position in the Enterprise)*

and who will sign as follows: .....
be, and is hereby, authorised to sign the Bid, and any and all other documents and/or correspondence in connection with and relating to the Bid, as well as to sign any Contract, and any and all documentation, resulting from the award of the Bid to the Enterprises in Consortium/Joint Venture mentioned above.

B. The Enterprises constituting the Consortium/Joint Venture, notwithstanding its composition, shall conduct all business under the name and style of: .....

C. The Enterprises to the Consortium/Joint Venture accept joint and several liabilities for the due fulfilment of the obligations of the Consortium/Joint Venture deriving from, and in any way connected with, the Contract entered into with the Employer in respect of the project described under item A above.

D. Any of the Enterprises to the Consortium/Joint Venture intending to terminate the consortium/joint venture agreement, for whatever reason, shall give the Employer 30 day's written notice of such intention. Notwithstanding such decision to terminate, the Enterprises shall remain jointly and severally liable to the Employer for the due fulfilment of the obligations of the Consortium/Joint Venture as mentioned under item D above.

E. No Enterprise to the Consortium/Joint Venture shall, without the prior written consent of the other Enterprises to the Consortium/Joint Venture and of the Employer, cede any of its rights or assign any of its obligations under the consortium/joint venture agreement in relation to the Contract with the Employer referred to herein.

F. The Enterprises choose as the *domicilium citandi et executandi* of the Consortium/Joint Venture for all purposes arising from the consortium/joint venture agreement and the Contract with the Employer in respect of the project under item A above:

Physical address:.....

.....

..... (code)

Postal address: .....

.....

..... (code)

Telephone number: ..... (code)

Fax number: ..... (code)

	Name	Capacity	Signature
1			
2			
3			
4			
5			
6			
7			
8			
9			
10			
11			
12			
13			
14			
15			

Note:

1. ** Delete which is not applicable.*
2. ***NB**. This resolution must be signed by all the Duly Authorised Representatives of the Legal Entities to the Consortium Joint Venture submitting this Bid.*
3. *Should the number of Duly Authorised Representatives of the Legal Entities joining forces in this Bid exceed the space available above, additional names and signatures must be supplied on a separate page.*
4. *Resolutions, duly completed and signed, from the separate Enterprises who participate in this Consortium/Joint Venture must be attached to the Special Resolution.*

T2.1.04: SCHEDULE OF PROPOSED SUBCONTRACTORS

PROJECT TITLE:	APPOINTMENT OF A CONTRACTOR FOR THE CONSTRUCTION OF VARIOUS INFRASTRUCTURE PROJECTS, INCLUDING INSTALLATION OF BIOSECURITY MEASURES AND RENOVATIONS TO ANIMAL ENCLOSURES, FOR THE SOUTH AFRICAN NATIONAL BIODIVERSITY INSTITUTE (SANBI) AT THE NATIONAL ZOOLOGICAL GARDEN IN PRETORIA
CONTRACT NO:	**SANBI: NZG412/2022**

We notify you that it is our intention to employ the following Subcontractors for work in this contract.

If we are awarded a contract, we agree that this notification does not change the requirement for us to submit the names of proposed Subcontractors in accordance with requirements in the contract for such appointments. If there are no such requirements in the contract, then your written acceptance of this list shall be binding between us.

	Name and address of proposed Subcontractor	**Nature and extent of work**	**Previous experience with Subcontractor**
1			
2			
3			
4			

Name of representative	**Signature**	**Capacity**	**Date**

Name of organisation:	

T2.1.05: CAPACITY OF TENDERER

PROJECT TITLE:	APPOINTMENT OF A CONTRACTOR FOR THE CONSTRUCTION OF VARIOUS INFRASTRUCTURE PROJECTS, INCLUDING INSTALLATION OF BIOSECURITY MEASURES AND RENOVATIONS TO ANIMAL ENCLOSURES, FOR THE SOUTH AFRICAN NATIONAL BIODIVERSITY INSTITUTE (SANBI) AT THE NATIONAL ZOOLOGICAL GARDEN IN PRETORIA
CONTRACT NO:	**SANBI: NZG412/2022**

1. WORK CAPACITY: *(The Tenderer is requested to furnish the following particulars, attach additional pages if more space is required. Failure to furnish the particulars may result in the Tender being disregarded.)*

Skilled artisans employed		**Unskilled employees employed**	
Categories of artisans	**Number**	**Categories of employees**	**Number**

1.1. Provide full particulars of:

Machinery	**Plant**	**Workshops**

Any reference to words “Bid” or Bidder” herein and/or in any other documentation shall be construed to have the same meaning as the words “Tender” or “Tenderer”.

2. PARTICULARS OF COMMITMENTS WHICH THE TENDERER HAS PREVIOUSLY COMPLETED AND PRESENTLY ENGAGED WITH:

2.1. Current projects:

Project		Place (town)	Reference / Contact person	Contact Tel. No.	Contract amount	Contract period	Date of commencement	Scheduled date of completion
1								
2								
3								
4								
5								
6								
7								
8								
9								

Any reference to words “Bid” or Bidder” herein and/or in any other documentation shall be construed to have the same meaning as the words “Tender” or “Tenderer”.

10								

Any reference to words “Bid” or Bidder” herein and/or in any other documentation shall be construed to have the same meaning as the words “Tender” or “Tenderer”.

2.2. Previous projects:

	Project	Place (town)	Reference / Contact person	Contact Tel. No.	Contract amount	Contract period	Date of commencement	Scheduled date of completion	Actual date of completion
1									
2									
3									
4									
5									
6									
7									
8									

Name of Tenderer	**Signature**	**Date**

Any reference to words “Bid” or Bidder” herein and/or in any other documentation shall be construed to have the same meaning as the words “Tender” or “Tenderer”.

T2.1.06: PREFERENCE POINT SYSTEM

PREFERENCE POINTS CLAIM FORM IN TERMS OF THE PREFERENTIAL PROCUREMENT REGULATIONS 2011

This preference form must form part of all bids invited. It contains general information and serves as a claim form for preference points for Broad-Based Black Economic Empowerment (B-BBEE) Status Level of Contribution

NB: BEFORE COMPLETING THIS FORM, BIDDERS MUST STUDY THE GENERAL CONDITIONS, DEFINITIONS AND DIRECTIVES APPLICABLE IN RESPECT OF B-BBEE, AS PRESCRIBED IN THE PREFERENTIAL PROCUREMENT REGULATIONS, 2017.

1. GENERAL CONDITIONS

1.1 The following preference point systems are applicable to all bids:

- the 80/20 system for requirements with a Rand value equal to or above R30 000 and up to R50 000 000 (all applicable taxes included); and
- the 90/10 system for requirements with a Rand value above R50 000 000 (all applicable taxes included).

1.2 The value of this bid is estimated to be below R50 000 000.00 (all applicable taxes included) and therefore the 80/20 system shall be applicable.

1.3 Preference points for this bid shall be awarded for:

(a) Price; and
(b) B-BBEE Status Level of Contribution.

1.3.1 The maximum points for this bid are allocated as follows:

		POINTS
1.3.1.1	**PRICE**	**80**
1.3.1.2	**B-BBEE STATUS LEVEL OF CONTRIBUTION**	**20**
	Total points for Price and B-BBEE must not exceed	**100**

1.4 Failure on the part of a bidder to fill in and/or to sign this form and submit a B-BBEE Verification Certificate from a Verification Agency accredited by the South African Accreditation System (SANAS) or a Registered Auditor approved by the Independent Regulatory Board of Auditors (IRBA) or an Accounting Officer as contemplated in the Close Corporation Act (CCA) together with the bid, will be interpreted to mean that preference points for B-BBEE status level of contribution are not claimed.

1.5. The purchaser reserves the right to require of a bidder, either before a bid is adjudicated or at any time subsequently, to substantiate any claim in regard to preferences, in any manner required by the purchaser.

2. DEFINITIONS

2..1 **"all applicable taxes"** includes value-added tax, pay as you earn, income tax, unemployment Insurance fund contributions and skills development levies;

2.2 **"B-BBEE"** means broad-based black economic empowerment as defined in section 1 of the Broad -Based Black Economic Empowerment Act;

2.3 "**B-BBEE status level of contributor"** means the B-BBEE status received by a measured entity Based on its overall performance using the relevant scorecard contained in the Codes of Good Practice on Black Economic Empowerment, issued in terms of section 9(1) of the Broad-Based Black Economic Empowerment Act;

2.4 **"bid"** means a written offer in a prescribed or stipulated form in response to an invitation by an organ of state for the provision of services, works or goods, through price quotations, advertised competitive bidding processes or proposals;

2.5 **"Broad-Based Black Economic Empowerment Act"** means the Broad-Based Black Economic Empowerment Act, 2003 (Act No. 53 of 2003);

2.6 **"comparative price"** means the price after the factors of a non-firm price and all unconditional discounts that can be utilized have been taken into consideration;

2.7 **"consortium or joint venture"** means an association of persons for the purpose of combining their expertise, property, capital, efforts, skill and knowledge in an activity for the execution of a contract;

2.8 **"contract"** means the agreement that results from the acceptance of a bid by an organ of state;

2.9 **"EME"** means any enterprise with annual total revenue of R5 million or less.

2.10 **"Firm price"** means the price that is only subject to adjustments in accordance with the actual increase or decrease resulting from the change, imposition, or abolition of customs or excise duty and any other duty, levy, or tax, which, in terms of the law or regulation, is binding on the contractor and demonstrably has an influence on the price of any supplies, or the rendering costs of any service, for the execution of the contract;

2.11 **"functionality"** means the measurement according to predetermined norms, as set out in the bid documents, of a service or commodity that is designed to be practical and useful, working or operating, taking into account, among other factors, the quality, reliability, viability and durability of a service and the technical capacity and ability of a bidder;

2.12 **"non-firm prices"** means all prices other than "firm" prices;

2.13 **"person"** includes a juristic person;

2.14 **"rand value"** means the total estimated value of a contract in South African currency, calculated at the time of bid invitations, and includes all applicable taxes and excise duties;

2.15 **"sub-contract"** means the primary contractor's assigning, leasing, making out work to, or employing, another person to support such primary contractor in the execution of part of a project in terms of the contract;

2.16 **"total revenue"** bears the same meaning assigned to this expression in the Codes of Good Practice on Black Economic Empowerment, issued in terms of section 9(1) of the Broad-Based Black Economic Empowerment Act and promulgated in the *Government Gazette* on 9 February 2007;

2.17 **"trust"** means the arrangement through which the property of one person is made over or bequeathed to a trustee to administer such property for the benefit of another person; and

2.18 **"trustee"** means any person, including the founder of a trust, to whom property is bequeathed in order for such property to be administered for the benefit of another person.

3. ADJUDICATION USING A POINT SYSTEM

3.1 The bidder obtaining the highest number of total points will be awarded the contract.

3.2 Preference points shall be calculated after prices have been brought to a comparative basis taking into account all factors of non-firm prices and all unconditional discounts;.

3.3 Points scored must be rounded off to the nearest 2 decimal places.

3.4 In the event that two or more bids have scored equal total points, the successful bid must be the one scoring the highest number of preference points for B-BBEE.

3.5 However, when functionality is part of the evaluation process and two or more bids have scored equal points including equal preference points for B-BBEE, the successful bid must be the one scoring the highest score for functionality.

3.6 Should two or more bids be equal in all respects, the award shall be decided by the drawing of lots.

4. POINTS AWARDED FOR PRICE

4.1 THE 80/20 OR 90/10 PREFERENCE POINT SYSTEMS

A maximum of 80 or 90 points is allocated for price on the following basis:

80/20 or 90/10

$$Ps = 80\left(1 - \frac{Pt - P\min}{P\min}\right) \quad \text{or} \quad Ps = 90\left(1 - \frac{Pt - P\min}{P\min}\right)$$

Where

Ps = Points scored for comparative price of bid under consideration

Pt = Comparative price of bid under consideration

Pmin = Comparative price of lowest acceptable bid

5. Points awarded for B-BBEE Status Level of Contribution

5.1 In terms of Regulation 5 (2) and 6 (2) of the Preferential Procurement Regulations, preference points must be awarded to a bidder for attaining the B-BBEE status level of contribution in accordance with the table below:

B-BBEE Status Level of Contributor	Number of points (90/10 system)	Number of points (80/20 system)
1	10	20
2	9	18
3	8	14
4	5	12
5	4	8
6	3	6
7	2	4
8	1	2
Non-compliant contributor	0	0

5.2 Bidders who qualify as EMEs in terms of the B-BBEE Act must submit a certificate issued by an Accounting Officer as contemplated in the CCA or a Verification Agency accredited by SANAS or a Registered Auditor. Registered auditors do not need to meet the prerequisite for IRBA's approval for the purpose of conducting verification and issuing EMEs with B-BBEE Status Level Certificates.

5.3 Bidders other than EMEs must submit their original and valid B-BBEE status level verification certificate or a certified copy thereof, substantiating their B-BBEE rating issued by a Registered Auditor approved by IRBA or a Verification Agency accredited by SANAS.

5.4 A trust, consortium or joint venture, will qualify for points for their B-BBEE status level as a legal entity, provided that the entity submits their B-BBEE status level certificate.

5.5 A trust, consortium or joint venture will qualify for points for their B-BBEE status level as an unincorporated entity, provided that the entity submits their consolidated B-BBEE scorecard as if they were a group structure and that such a consolidated B-BBEE scorecard is prepared for every separate bid.

5.6 Tertiary institutions and public entities will be required to submit their B-BBEE status level certificates in terms of the specialized scorecard contained in the B-BBEE Codes of Good Practice.

5.7 A person will not be awarded points for B-BBEE status level if it is indicated in the bid documents that such a bidder intends sub-contracting more than 25% of the value of the contract to any other enterprise that does not qualify for at least the points that such a bidder qualifies for, unless the intended sub-contractor is an EME that has the capability and ability to execute the sub-contract.

5.8 A person awarded a contract may not sub-contract more than 25% of the value of the contract to any Other enterprise that does not have an equal or higher B-BBEE status level than the person concerned, unless the contract is sub-contracted to an EME that has the capability and ability to execute the sub-contract.

6. BID DECLARATION

6.1 Bidders who claim points in respect of B-BBEE Status Level of Contribution must complete the following:

7. B-BBEE STATUS LEVEL OF CONTRIBUTION CLAIMED IN TERMS OF PARAGRAPHS 1.3.1.2 AND 5.1

7.1 B-BBEE Status Level of Contribution: ……. = ……(maximum of 10 or 20 points)

(Points claimed in respect of paragraph 7.1 must be in accordance with the table reflected in paragraph 5.1 and must be substantiated by means of a B-BBEE certificate issued by a Verification Agency accredited by SANAS or a Registered Auditor approved by IRBA or an Accounting Officer as contemplated in the CCA).

8 SUB-CONTRACTING

8.1 Will any portion of the contract be sub-contracted? YES / NO (delete which is not applicable)

8.1.1 If yes, indicate:
(i) what percentage of the contract will be subcontracted?.....%
(ii) the name of the sub-contractor?.....
(iii) the B-BBEE status level of the sub-contractor? .....
(iv) whether the sub-contractor is an EME?..... YES / NO (delete which is not applicable)

9 DECLARATION WITH REGARD TO COMPANY/FIRM

9.1 Name of company/firm : .....

9.2 VAT registration number : .....

9.3 Company registration number : .....

9.4 TYPE OF COMPANY/ FIRM

- ☐ Partnership/Joint Venture / Consortium
- ☐ One person business/sole propriety
- ☐ Close corporation
- ☐ Company
- ☐ (Pty) Limited

[TICK APPLICABLE BOX]

9.5 DESCRIBE PRINCIPAL BUSINESS ACTIVITIES

.....
.....
.....

9.6 COMPANY CLASSIFICATION

- ☐ Manufacturer
- ☐ Supplier
- ☐ Professional service provider
- ☐ Other service providers, e.g. transporter, etc.

[TICK APPLICABLE BOX]

9.7 Total number of years the company/firm has been in business? .....

9.8 I/we, the undersigned, who is / are duly authorised to do so on behalf of the company/firm, certify that the points claimed, based on the B-BBE status level of contribution indicated in paragraph 7 of the foregoing certificate, qualifies the company/ firm for the preference(s) shown and I / we acknowledge that:

(i) The information furnished is true and correct;

(ii) The preference points claimed are in accordance with the General Conditions as indicated in paragraph 1 of this form.

(iii) In the event of a contract being awarded as a result of points claimed as shown in paragraph 7, the contractor may be required to furnish documentary proof to the satisfaction of the purchaser that the claims are correct;

(iv) If the B-BBEE status level of contribution has been claimed or obtained on a fraudulent basis or any of the conditions of contract have not been fulfilled, the purchaser may, in addition to any other remedy it may have –

(a) disqualify the person from the bidding process;

(b) recover costs, losses or damages it has incurred or suffered as a result of that person's conduct;

(c) cancel the contract and claim any damages which it has suffered as a result of having to make less favourable arrangements due to such cancellation;

(d) restrict the bidder or contractor, its shareholders and directors, or only the shareholders and directors who acted on a fraudulent basis, from obtaining business from any organ of state for a period not exceeding 10 years, after the *audi alteram partem* (hear the other side) rule has been applied; and

(e) forward the matter for criminal prosecution

WITNESSES:

1. ……

2. ……

SIGNATURE(S) OF BIDDER(S)

……..

DATE:……..

ADDRESS: .....

.....

.....

T2.1.07: SCHEDULE OF KEY PERSONNEL

The Tenderer shall list below the key personnel who will be engaged on the Contract by completing this schedule.

Key Contract Personnel Name	Job Title	Qualifications	Professional Registration	Proposed Project Position

T2.1.08: UNEMPLOYMENT INSURANCE FUND (UIF)

PROJECT TITLE:	APPOINTMENT OF A CONTRACTOR FOR THE CONSTRUCTION OF VARIOUS INFRASTRUCTURE PROJECTS, INCLUDING INSTALLATION OF BIOSECURITY MEASURES AND RENOVATIONS TO ANIMAL ENCLOSURES, FOR THE SOUTH AFRICAN NATIONAL BIODIVERSITY INSTITUTE (SANBI) AT THE NATIONAL ZOOLOGICAL GARDEN IN PRETORIA
CONTRACT NO:	**SANBI: NZG412/2022**

UIF compliance is demonstrated by submission of one of the following:

- A valid copy of the UIF Letter of Compliance issued by the Department of Employment and Labour, or
- Labour uFiling Employer Statement of Account indicating UIF payments or accruals not older than 12 months, or
- SARS eFiling Employer Statement of Account indicating UIF payments or accruals not older than 12 months, or
- Valid proof of exemption for UIF.

T2.1.09: COMPENSATION OF OCCUPATIONAL INJURIES AND DISEASE ACT (COIDA)

PROJECT TITLE:	APPOINTMENT OF A CONTRACTOR FOR THE CONSTRUCTION OF VARIOUS INFRASTRUCTURE PROJECTS, INCLUDING INSTALLATION OF BIOSECURITY MEASURES AND RENOVATIONS TO ANIMAL ENCLOSURES, FOR THE SOUTH AFRICAN NATIONAL BIODIVERSITY INSTITUTE (SANBI) AT THE NATIONAL ZOOLOGICAL GARDEN IN PRETORIA
CONTRACT NO:	**SANBI: NZG412/2022**

The tenderer is registered and in good standing with the compensation fund issued by the Department of Labour (Letter of good standing with COIDA).

T2.1.10: DECLARATION OF INTEREST

PROJECT TITLE:	APPOINTMENT OF A CONTRACTOR FOR THE CONSTRUCTION OF VARIOUS INFRASTRUCTURE PROJECTS, INCLUDING INSTALLATION OF BIOSECURITY MEASURES AND RENOVATIONS TO ANIMAL ENCLOSURES, FOR THE SOUTH AFRICAN NATIONAL BIODIVERSITY INSTITUTE (SANBI) AT THE NATIONAL ZOOLOGICAL GARDEN IN PRETORIA
CONTRACT NO:	**SANBI: NZG412/2022**

Any person, including persons in the employ of the South African National Biodiversity Institute ; or persons acting on behalf of the South African National Biodiversity Institute performing business as a sole proprietor or in partnership; or persons acting in the capacity of a trustee/s of a trust; or any legal entity, including legal entities and trusts, of which the members, directors, shareholders, trustees and/or beneficiaries are in the employ of the South African National Biodiversity Institute or act on behalf of the South African National Biodiversity Institute, may make an offer or offers in terms of this tender invitation.

In view of the possible allegations of favouritism, should the resulting tender, or part thereof, be awarded to persons employed by the South African National Biodiversity Institute; or to persons who act on behalf of the South African National Biodiversity; or to persons connected or related to them, the bidder / tenderer or the bidder / tenderer's duly authorized representative shall disclose herein any relationship and/or kinship, including blood relation, which he/she; his/her employer; the bidder / tenderer's management; members; directors; partners; shareholders; trustees; and/or beneficiaries may have with any person or persons in the employ of the South African National Biodiversity Institute and/or with any person or persons acting on behalf of the South African National Biodiversity Institute and who may directly or indirectly be involved in, and/or may be in a position to influence the adjudication and/or evaluation and/or award of this bid / tender.

In order to give effect to the above, the following questionnaire shall be completed and submitted with the tender. Failure to furnish the information requested in the questionnaire below may render the tender submission not to be considered at all.

(In answering the questions below, indicate the applicable answer with a ✓ and cross the other out)

1. Is the bidder / tenderer and/or the duly authorized representative in the employ of the South African National Biodiversity Institute?

   ☐ YES ☐ NO

   If yes, State the full particulars of such person/s, together with their current position held as an employee of the South African National Biodiversity Institute.

   _____

   _____

2. Is the bidder / tenderer and/or the duly authorized representative in the employ of the person/s or legal entity acting on behalf of the South African National Biodiversity Institute, and who may directly or indirectly be involved in, and/or may be in a position to influence, the adjudication and/or evaluation and/or award of this tender?

   ☐ YES ☐ NO

   If yes, State the full particulars of such person/s, together with their current position held as an employee of such person/s or legal entity acting on behalf of the South African National Biodiversity Institute.

3. Does the bidder / tenderer, the bidder's / tenderer's duly authorised representative, and/or any of the bidder's / tenderer's employees, management, partners, members, directors, shareholders, trustees and/or beneficiaries have any relationship (family, friend, business- or financial interest) with a person, or persons in the employ of the South African National Biodiversity Institute and/or in the employ of the person/s or legal entity acting on behalf of the South African National Biodiversity Institute, and who may directly or indirectly be involved in, and/or may be in a position to influence, the adjudication and/or evaluation and/or award of this tender?

   ☐ YES ☐ NO

   If yes, State the full particulars of the persons between whom the relationship exists, the nature of the relationship and the current position/status of such employee/s of the South African National Biodiversity Institute and/or of the person/s and/or legal entity acting on behalf of the South African National Biodiversity Institute herein.

   _____

   _____

   I, the undersigned, _____
   (name of the person duly authorised to sign the bid / tender documents on behalf of the bidder / tenderer) hereby certify that the information, furnished above, is correct in all respects. I accept and understand that the South African National Biodiversity Institute, may act against me and the bidder / tenderer, jointly and severally, should this declaration prove to be false.

   Duly signed at _____ on this the _____ day of _____ (month)

   _____ (year)

_____	_____
Full name of signatory	Name of Bidder / Tenderer
_____	_____
Capacity of Signatory	Signature

COMMISSIONER OF OATHS

T2.1.11: MEDICAL CERTIFICATE FOR THE CONFIRMATION OF PERMANENT DISABLED STATUS

PROJECT TITLE:	APPOINTMENT OF A CONTRACTOR FOR THE CONSTRUCTION OF VARIOUS INFRASTRUCTURE PROJECTS, INCLUDING INSTALLATION OF BIOSECURITY MEASURES AND RENOVATIONS TO ANIMAL ENCLOSURES, FOR THE SOUTH AFRICAN NATIONAL BIODIVERSITY INSTITUTE (SANBI) AT THE NATIONAL ZOOLOGICAL GARDEN IN PRETORIA
CONTRACT NO:	**SANBI: NZG412/2022**

I, _____ (*surname and name*), Identity number,

_____ do hereby declare that I am a registered medical practitioner, with my

practice number being _____, practicing at _____

_____ (Physical and postal addresses) declare that I have examined Mr/Mrs

_____, identity number of _____

and have found the said person to be permanently disabled

or having a recurring disability.

"Disability" means, in respect of a person, a permanent impairment of a physical, intellectual, or sensory function, which results in restricted, or lack of, ability to perform an activity in the manner, or within the range, considered normal for a human being." – As per Preferential Procurement Policy Framework Act: No 5 of 2000 (PPPFA)

The nature of the disability is as follows:

_____

_____

_____

Thus signed at _____ on this _____day of _____ of _____.

_____

Signature

_____

Date

OFFICIAL STAMP OF MEDICAL PRACTITIONER

T2.1.12: PROOF OF REGISTRATION WITH CONSTRUCTION INDUSTRY DEVELOPMENT BOARD

PROJECT TITLE:	APPOINTMENT OF A CONTRACTOR FOR THE CONSTRUCTION OF VARIOUS INFRASTRUCTURE PROJECTS, INCLUDING INSTALLATION OF BIOSECURITY MEASURES AND RENOVATIONS TO ANIMAL ENCLOSURES, FOR THE SOUTH AFRICAN NATIONAL BIODIVERSITY INSTITUTE (SANBI) AT THE NATIONAL ZOOLOGICAL GARDEN IN PRETORIA
CONTRACT NO:	**SANBI: NZG412/2022**

The Tenderer shall provide a printed copy of the Active Contractor's Listing off the CIDB website.www.cidb.org.za. In the case of a joint venture, a printed copy of the Active Contractor's listing must be provided for each member of the joint venture.

Name of Contractor:

Contractor Grading Designation:

CIDB Contractor Registration Number:

T2.1.13: COPY OF CSD REGISTRATION CERTIFICATE

PROJECT TITLE:	APPOINTMENT OF A CONTRACTOR FOR THE CONSTRUCTION OF VARIOUS INFRASTRUCTURE PROJECTS, INCLUDING INSTALLATION OF BIOSECURITY MEASURES AND RENOVATIONS TO ANIMAL ENCLOSURES, FOR THE SOUTH AFRICAN NATIONAL BIODIVERSITY INSTITUTE (SANBI) AT THE NATIONAL ZOOLOGICAL GARDEN IN PRETORIA
CONTRACT NO:	**SANBI: NZG412/2022**

A copy of Central Suppliers Database (CSD) Registration Certificate must be included for evaluation purposes.

T2.1.14: RECORD OF ADDENDA TO TENDER DOCUMENTS

PROJECT TITLE:	APPOINTMENT OF A CONTRACTOR FOR THE CONSTRUCTION OF VARIOUS INFRASTRUCTURE PROJECTS, INCLUDING INSTALLATION OF BIOSECURITY MEASURES AND RENOVATIONS TO ANIMAL ENCLOSURES, FOR THE SOUTH AFRICAN NATIONAL BIODIVERSITY INSTITUTE (SANBI) AT THE NATIONAL ZOOLOGICAL GARDEN IN PRETORIA
CONTRACT NO:	**SANBI: NZG412/2022**

I / We confirm that the following communications received from the South African National Biodiversity Institute before the submission of this tender offer, amending the tender documents, have been taken into account in this tender offer: *(Attach additional pages if more space is required)*

	Date	Title or Details
1.		
2.		
3.		
4.		
5.		
6.		
7.		
8.		
9.		

Name of Tenderer	Signature	Date

I / We confirm that no communications were received from the South African National Biodiversity Institute before the submission of this tender offer, amending the tender documents.

Name of Tenderer	Signature	Date

T2.1.15: COMPULSORY ENTERPRISE QUESTIONNAIRE

PROJECT TITLE:	APPOINTMENT OF A CONTRACTOR FOR THE CONSTRUCTION OF VARIOUS INFRASTRUCTURE PROJECTS, INCLUDING INSTALLATION OF BIOSECURITY MEASURES AND RENOVATIONS TO ANIMAL ENCLOSURES, FOR THE SOUTH AFRICAN NATIONAL BIODIVERSITY INSTITUTE (SANBI) AT THE NATIONAL ZOOLOGICAL GARDEN IN PRETORIA
CONTRACT NO:	**SANBI: NZG412/2022**

The following particulars must be furnished. In the case of a joint venture, separate enterprise questionnaires in respect of each partner must be completed and submitted.

Section 1: Name of enterprise: .....

Section 2: VAT registration number, if any: .....

Section 3: CIDB registration number, if any: .....

Section 4: Particulars of sole proprietors and partners in partnerships

Name*	Identity number*	Personal income tax number*

*Complete only if sole proprietor or partnership and attach separate page if more than 3 partners.

Section 5: Particulars of companies and close corporations

Company registration number: .....

Close corporation number: .....

Tax reference number: .....

Section 6: Record in the service of the state

Indicate by marking the relevant boxes with a cross, if any sole proprietor, partner in a partnership or director, manager, principal shareholder or stakeholder in a company or close corporation is currently, or has been within the last 12 months, in the service of any of the following:

- □ a member of any municipal council
- □ a member of any provincial legislature
- □ a member of the National Assembly or the National Council of Province
- □ an employee of any provincial department, national or provincial public entity or constitutional institution within the meaning of the Public Finance Management Act, 1999 (Act No 1 of 1999)

- □ a member of the board of directors of any municipal entity
- □ an official of any municipality or municipal entity
- □ a member of an accounting authority of any national or provincial public entity
- □ an employee of Parliament or a provincial legislature

If any of the above boxes are marked, disclose the following:

Name of sole proprietor, partner, director, manager, principal shareholder or stakeholder	Name of institution, public office, board or organ of state and position held	Status of service (tick appropriate column)	
		Current	Within last 12 months

*Insert separate page if necessary.

Section 7: Record of spouses, children and parents in the service of the state

Indicate by marking the relevant boxes with a cross, if any spouse, child or parent or a sole proprietor, partner in a partnership or director, manager, principal shareholder or stakeholder in a company or close corporation is currently, or has been within the last 12 months, in the service of any of the following:

- □ a member of any municipal council
- □ a member of any provincial legislature
- □ a member of the National Assembly or the National Council of Province
- □ a member of the board of directors of any municipal entity
- □ an official of any municipality or municipal entity
- □ an employee of any provincial department, national or provincial public entity or constitutional institution within the meaning of the Public Finance Management Act, 1999 (Act No 1 of 1999)
- □ a member of an accounting authority of any national or provincial public entity
- □ an employee of Parliament or a provincial legislature

Name of spouse, child or parent	Name of institution, public office, board or organ of state and position held	Status of service (tick appropriate column)	
		Current	Within last 12 months

*Insert separate page if necessary.

The undersigned, who warrants that he/she is duly authorised to do so on behalf of the enterprise:

(i) authorises the Employer to obtain a tax clearance certificate from the South African Revenue Services that my/our tax matters are in order;

(ii) confirms that neither the name of the enterprise or the name of any partner, manager, director or other person, who wholly or partly exercises, or may exercise, control over the enterprise appears on the Register of Tender Defaulters established in terms of the Prevention and Combating of Corrupt Activities Act, 2004;

(iii) confirms that no partner, member, director or other person, who wholly or partly exercises, or may exercise, control over the enterprise, has within the last five years been convicted of fraud or corruption;

(iv) confirms that I/we are not associated, linked or involved with any other tendering entities submitting tender offers and have no other relationship with any of the Tenderers or those responsible for compiling the Scope of Work that could cause or be interpreted as a conflict of interest; and

(v) confirms that the contents of this questionnaire are within my personal knowledge and are to the best of my belief both true and correct.

Signed: ..... Date: .....

Name: ..... Position: .....

Enterprise name: .....

SBD 6.2

DECLARATION CERTIFICATE FOR LOCAL PRODUCTION AND CONTENT FOR DESIGNATED SECTORS

This Standard Bidding Document (SBD) must form part of all bids invited. It contains general information and serves as a declaration form for local content (local production and local content are used interchangeably).

Before completing this declaration, bidders must study the General Conditions, Definitions, Directives applicable in respect of Local Content as prescribed in the Preferential Procurement Regulations, 2017, the South African Bureau of Standards (SABS) approved technical specification number SATS 1286:2011 (Edition 1) and the Guidance on the Calculation of Local Content together with the Local Content Declaration Templates [Annex C (Local Content Declaration: Summary Schedule), D (Imported Content Declaration: Supporting Schedule to Annex C) and E (Local Content Declaration: Supporting Schedule to Annex C)].

1. General Conditions

1.1. Preferential Procurement Regulations, 2017 (Regulation 8) make provision for the promotion of local production and content.

1.2. Regulation 8.(2) prescribes that in the case of designated sectors, organs of state must advertise such tenders with the specific bidding condition that only locally produced or manufactured goods, with a stipulated minimum threshold for local production and content will be considered.

1.3. Where necessary, for tenders referred to in paragraph 1.2 above, a two stage bidding process may be followed, where the first stage involves a minimum threshold for local production and content and the second stage price and B-BBEE.

1.4. A person awarded a contract in relation to a designated sector, may not sub-contract in such a manner that the local production and content of the overall value of the contract is reduced to below the stipulated minimum threshold.

1.5. The local content (LC) expressed as a percentage of the bid price must be calculated in accordance with the SABS approved technical specification number SATS 1286: 2011 as follows:

$$LC = [1 - x / y] * 100$$

Where
x is the imported content in Rand
y is the bid price in Rand excluding value added tax (VAT)

Prices referred to in the determination of x must be converted to Rand (ZAR) by using the exchange rate published by South African Reserve Bank (SARB) at 12:00 on the date of advertisement of the bid as indicated in paragraph 4.1 below.

The SABS approved technical specification number SATS 1286:2011 is accessible on http:/www.thedti.gov.za/industrial development/ip.jsp at no cost.

1.6. A bid may be disqualified if this Declaration Certificate and the Annex C (Local Content Declaration: Summary Schedule) are not submitted as part of the bid documentation;

2. The stipulated minimum threshold(s) for local production and content (refer to Annex A of SATS 1286:2011) for this bid is/are as follows:

Description of services, works or goods	Stipulated minimum threshold
Steel Value-added Products - Fasteners	**100%**

3. Does any portion of the goods or services offered have any imported content?

(***Tick applicable box***)

YES		NO	

3..1 If yes, the rate(s) of exchange to be used in this bid to calculate the local content as prescribed in paragraph 1.5 of the general conditions must be the rate(s) published by SARB for the specific currency at 12:00 on the date of advertisement of the bid.

The relevant rates of exchange information are accessible on www.reservebank.co.za

Indicate the rate(s) of exchange against the appropriate currency in the table below (refer to Annex A of SATS 1286:2011):

Currency	**Rates of exchange**
US Dollar	
Pound Sterling	
Euro	
Yen	
Other	

NB: Bidders must submit proof of the SARB rate (s) of exchange used.

4. Where, after the award of a bid, challenges are experienced in meeting the stipulated minimum threshold for local content the dti must be informed accordingly in order for the dti to verify and in consultation with the AO/AA provide directives in this regard.

LOCAL CONTENT DECLARATION
(REFER TO ANNEX B OF SATS 1286:2011)

LOCAL CONTENT DECLARATION BY CHIEF FINANCIAL OFFICER OR OTHER LEGALLY RESPONSIBLE PERSON NOMINATED IN WRITING BY THE CHIEF EXECUTIVE OR SENIOR MEMBER/PERSON WITH MANAGEMENT RESPONSIBILITY (CLOSE CORPORATION, PARTNERSHIP OR INDIVIDUAL)

IN RESPECT OF BID NO. .....

ISSUED BY: (Procurement Authority / Name of Institution):

.....

NB

1 The obligation to complete, duly sign and submit this declaration cannot be transferred to an external authorized representative, auditor or any other third party acting on behalf of the bidder.

2 Guidance on the Calculation of Local Content together with Local Content Declaration Templates (Annex C, D and E) is accessible on http://www.thdti.gov.za/industrial development/ip.jsp. Bidders should first complete Declaration D. After completing Declaration D, bidders should complete Declaration E and then consolidate the information on Declaration C. **Declaration C should be submitted with the bid documentation at the closing date and time of the bid in order to substantiate the declaration made in paragraph (c) below.** Declarations D and E should be kept by the bidders for verification purposes for a period of at least 5 years. The successful bidder is required to continuously update Declarations C, D and E with the actual values for the duration of the contract.

I, the undersigned, ……..... (full names),

do hereby declare, in my capacity as …… ……..

of .....(name of bidder entity), the following:

(a) The facts contained herein are within my own personal knowledge.

(b) I have satisfied myself that:

(i) the goods/services/works to be delivered in terms of the above-specified bid comply with the minimum local content requirements as specified in the bid, and as measured in terms of SATS 1286:2011; and

(c) The local content percentage (%) indicated below has been calculated using the formula given in clause 3 of SATS 1286:2011, the rates of exchange indicated in paragraph 4.1 above and the information contained in Declaration D and E which has been consolidated in Declaration C:

Bid price, excluding VAT (y)	R
Imported content (x), as calculated in terms of SATS 1286:2011	R
Stipulated minimum threshold for local content (paragraph 3 above)	
Local content %, as calculated in terms of SATS 1286:2011	

If the bid is for more than one product, the local content percentages for each product contained in Declaration C shall be used instead of the table above.

The local content percentages for each product has been calculated using the formula given in clause 3 of SATS 1286:2011, the rates of exchange indicated in paragraph 4.1 above and the information contained in Declaration D and E.

(d) I accept that the Procurement Authority / Institution has the right to request that the local content be verified in terms of the requirements of SATS 1286:2011.

(e) I understand that the awarding of the bid is dependent on the accuracy of the information furnished in this application. I also understand that the submission of incorrect data, or data that are not verifiable as described in SATS 1286:2011, may result in the Procurement Authority / Institution imposing any or all of the remedies as provided for in Regulation 14 of the Preferential Procurement Regulations, 2017 promulgated under the Preferential Policy Framework Act (PPPFA), 2000 (Act No. 5 of 2000).

SIGNATURE: _____ **DATE:** _____

WITNESS No. 1 _____ **DATE:** _____

WITNESS No. 2 _____ **DATE:** _____

SATS 1286.2011

Annex C

Local Content Declaration - Summary Schedule

Note: VAT to be excluded from all calculations

(C1)	**Tender No.**
(C2)	**Tender description:**
(C3)	**Designated product(s)**
(C4)	**Tender Authority:**
(C5)	**Tendering Entity name:**
(C6)	**Tender Exchange Rate:** USD ____ EU ____ GBP ____
(C7)	**Specified local content %**

		Calculation of local content						Tender summary			
Tender item no's	**List of items**	**Tender price - each (excl VAT)**	**Exempted imported value**	**Tender value net of exempted imported content**	**Imported value**	**Local value**	**Local content % (per item)**	**Tender Qty**	**Total tender value**	**Total exempted imported content**	**Total Imported content**
(C8)	*(C9)*	*(C10)*	*(C11)*	*(C12)*	*(C13)*	*(C14)*	*(C15)*	*(C16)*	*(C17)*	*(C18)*	*(C19)*

(C20) **Total tender value**	
(C21) **Total Exempt imported content**	
(C22) Total **Tender value net of exempt imported content**	
(C23) **Total Imported content**	
(C24) **Total local content**	
(C25) **Average local content % of tender**	

Signature of tenderer from Annex B

Date: _____

SATS 1286.2011

Annex D

Imported Content Declaration - Supporting Schedule to Annex C

(D1)	**Tender No.**	
(D2)	**Tender description:**	
(D3)	**Designated Products:**	
(D4)	**Tender Authority:**	
(D5)	**Tendering Entity name:**	
(D6)	**Tender Exchange Rate:**	USD EU GBP

Note: VAT to be excluded from all calculations

A. Exempted imported content

				Calculation of imported content						Summary	
Tender item no's	**Description of imported content**	**Local supplier**	**Overseas Supplier**	**Foreign currency value as per Commercial Invoice**	**Tender Exchange Rate**	**Local value of imports**	**Freight costs to port of entry**	**All locally incurred landing costs & duties**	**Total landed cost excl VAT**	**Tender Qty**	**Exempted imported value**
(D7)	*(D8)*	*(D9)*	*(D10)*	*(D11)*	*(D12)*	*(D13)*	*(D14)*	*(D15)*	*(D16)*	*(D17)*	*(D18)*

(D19) **Total exempt imported value**

This total must correspond with Annex C - C 21

B. Imported directly by the Tenderer

				Calculation of imported content						Summary	
Tender item no's	**Description of imported content**	**Unit of measure**	**Overseas Supplier**	**Foreign currency value as per Commercial Invoice**	**Tender Rate of Exchange**	**Local value of imports**	**Freight costs to port of entry**	**All locally incurred landing costs & duties**	**Total landed cost excl VAT**	**Tender Qty**	**Total imported value**
(D20)	*(D21)*	*(D22)*	*(D23)*	*(D24)*	*(D25)*	*(D26)*	*(D27)*	*(D28)*	*(D29)*	*(D30)*	*(D31)*
	`										

(D32) **Total imported value by tenderer**

C. Imported by a 3rd party and supplied to the Tenderer

Description of imported content	Unit of measure	Local supplier	Overseas Supplier	Calculation of imported content: Foreign currency value as per Commercial Invoice	Tender Rate of Exchange	Local value of imports	Freight costs to port of entry	All locally incurred landing costs & duties	Total landed cost excl VAT	Summary: Quantity imported	Total imported value
(D33)	*(D34)*	*(D35)*	*(D36)*	*(D37)*	*(D38)*	*(D39)*	*(D40)*	*(D41)*	*(D42)*	*(D43)*	*(D44)*
`											

(D45) **Total imported value by 3rd party**

D. Other foreign currency payments

Type of payment	Local supplier making the payment	Overseas beneficiary	Calculation of foreign currency payments: Foreign currency value paid	Tender Rate of Exchange	Summary of payments: Local value of payments
(D46)	*(D47)*	*(D48)*	*(D49)*	*(D50)*	*(D51)*

(D52) **Total of foreign currency payments declared by tenderer and/or 3rd party**

Signature of tenderer from Annex B

(D53) **Total of imported content & foreign currency payments - *(D32), (D45) & (D52)* above**

This total must correspond with Annex C - C 23

Date:

SATS 1286.2011

Annex E

Local Content Declaration - Supporting Schedule to Annex C

(E1)	**Tender No.**	
(E2)	**Tender description:**	
(E3)	**Designated products:**	
(E4)	**Tender Authority:**	
(E5)	**Tendering Entity name:**	

Note: **VAT to be excluded from all calculations**

Local Products (Goods, Services and Works)	**Description of items purchased**	**Local suppliers**	**Value**
	(E6)	*(E7)*	*(E8)*
		(E9) **Total local products (Goods, Services and Works)**	R 0

(E10)	**Manpower costs**	(Tenderer's manpower cost)	R 0
(E11)	**Factory overheads**	(Rental, depreciation & amortisation, utility costs, consumables etc.)	R 0
(E12)	**Administration overheads and mark-up**	(Marketing, insurance, financing, interest etc.)	R 0

(E13) **Total local content** R 0

This total must correspond with Annex C - C24

Signature of tenderer from Annex B

Date: _____

SBD 8

DECLARATION OF BIDDER'S PAST SUPPLY CHAIN MANAGEMENT PRACTICES

1 This Standard Bidding Document must form part of all bids invited.

2 It serves as a declaration to be used by institutions in ensuring that when goods and services are being procured, all reasonable steps are taken to combat the abuse of the supply chain management system.

3 The bid of any bidder may be disregarded if that bidder, or any of its directors have-

a. abused the institution's supply chain management system;

b. committed fraud or any other improper conduct in relation to such system; or

c. failed to perform on any previous contract.

4 **In order to give effect to the above, the following questionnaire must be completed and submitted with the bid.**

Item	Question	Yes	No
4.1	Is the bidder or any of its directors listed on the National Treasury's database as companies or persons prohibited from doing business with the public sector? (Companies or persons who are listed on this database were informed in writing of this restriction by the National Treasury after the *audi alteram partem* rule was applied).	Yes ☐	No ☐
4.1.1	If so, furnish particulars:		
4.2	Is the bidder or any of its directors listed on the Register for Tender Defaulters in terms of section 29 of the Prevention and Combating of Corrupt Activities Act (No 12 of 2004)? **To access this Register enter the National Treasury's website, www.treasury.gov.za, click on the icon "Register for Tender Defaulters" or submit your written request for a hard copy of the Register to facsimile number (012) 326 5445.**	Yes ☐	No ☐
4.2.1	If so, furnish particulars:		
4.3	Was the bidder or any of its directors convicted by a court of law (including a court outside of the Republic of South Africa) for fraud or corruption during the past five years?	Yes ☐	No ☐

4.3.1	If so, furnish particulars:		
4.4	Was any contract between the bidder and any organ of state terminated during the past five years on account of failure to perform on or comply with the contract?	Yes ☐	No ☐
4.4.1	If so, furnish particulars:		

CERTIFICATION

I, THE UNDERSIGNED (FULL NAME)…… CERTIFY THAT THE INFORMATION FURNISHED ON THIS DECLARATION FORM IS TRUE AND CORRECT.

I ACCEPT THAT, IN ADDITION TO CANCELLATION OF A CONTRACT, ACTION MAY BE TAKEN AGAINST ME SHOULD THIS DECLARATION PROVE TO BE FALSE.

……	**……..……**
Signature	**Date**
…….	**……..……**
Position	**Name of Bidder**

SBD 9

CERTIFICATE OF INDEPENDENT QUOTATION DETERMINATION

1 This Standard Bidding Document (SBD) must form part of all quotations[1] invited.

2 Section 4 (1) (b) (iii) of the Competition Act No. 89 of 1998, as amended, prohibits an agreement between, or concerted practice by, firms, or a decision by an association of firms, if it is between parties in a horizontal relationship and if it involves collusive bidding (or bid rigging).[2] Collusive bidding is a pe se prohibition meaning that it cannot be justified under any grounds.

3 Treasury Regulation 16A9 prescribes that accounting officers and accounting authorities must take all reasonable steps to prevent abuse of the supply chain management system and authorizes accounting officers and accounting authorities to:

a. disregard the bid of any bidder if that bidder, or any of its directors have abused the institution's supply chain management system and or committed fraud or any other improper conduct in relation to such system.

b. cancel a contract awarded to a supplier of goods and services if the supplier committed any corrupt or fraudulent act during the bidding process or the execution of that contract.

4 This SBD serves as a certificate of declaration that would be used by institutions to ensure that, when bids are considered, reasonable steps are taken to prevent any form of bid-rigging.

5 In order to give effect to the above, the attached Certificate of Bid Determination (SBD 9) must be completed and submitted with the bid:

[1] Includes price quotations, advertised competitive bids, limited bids and proposals.

[2] Bid rigging (or collusive bidding) occurs when businesses, that would otherwise be expected to compete, secretly conspire to raise prices or lower the quality of goods and / or services for purchasers who wish to acquire goods and / or services through a bidding process. Bid rigging is, therefore, an agreement between competitors not to compete.

SBD 9

CERTIFICATE OF INDEPENDENT BID DETERMINATION

I, the undersigned, in submitting the accompanying bid:

SANBI: NZG412/2022

Appointment of a contractor for the construction of various construction projects, including installation of biosecurity measures and renovations to mammal enclosures, for the South African National Biodiversity Institute (SANBI) at the National Zoological Garden in Pretoria

in response to the invitation for the quote made by:

SANBI

do hereby make the following statements that I certify to be true and complete in every respect:

I certify, on behalf of: _____that:

(Name of Bidder)

1. I have read and I understand the contents of this Certificate;
2. I understand that the accompanying bid will be disqualified if this Certificate is found not to be true and complete in every respect;
3. I am authorized by the bidder to sign this Certificate, and to submit the accompanying bid, on behalf of the bidder;
4. Each person whose signature appears on the accompanying bid has been authorized by the bidder to determine the terms of, and to sign the bid, on behalf of the bidder;
5. For the purposes of this Certificate and the accompanying bid, I understand that the word "competitor" shall include any individual or organization, other than the bidder, whether or not affiliated with the bidder, who:

    (a) has been requested to submit a bid in response to this bid invitation;
    (b) could potentially submit a bid in response to this bid invitation, based on their qualifications, abilities or experience; and
    (c) provides the same goods and services as the bidder and/or is in the same line of business as the bidder

6. The bidder has arrived at the accompanying bid independently from, and without consultation, communication, agreement or arrangement with any competitor. However communication between partners in a joint venture or consortium³ will not be construed as collusive bidding.
7. In particular, without limiting the generality of paragraphs 6 above, there has been no consultation, communication, agreement or arrangement with any competitor regarding:

    (a) prices;
    (b) geographical area where product or service will be rendered (market allocation)

Any reference to words "Bid" or Bidder" herein and/or in any other documentation shall be construed to have the same meaning as the words "Tender" or "Tenderer".

(c) methods, factors or formulas used to calculate prices;

(d) the intention or decision to submit or not to submit, a bid;

(e) the submission of a bid which does not meet the specifications and conditions of the bid; or

(f) bidding with the intention not to win the bid.

8. In addition, there have been no consultations, communications, agreements or arrangements with any competitor regarding the quality, quantity, specifications and conditions or delivery particulars of the products or services to which this bid invitation relates.

[3] Joint venture or Consortium means an association of persons for the purpose of combining their expertise, property, capital, efforts, skill and knowledge in an activity for the execution of a contract.

9. The terms of the accompanying bid have not been, and will not be, disclosed by the bidder, directly or indirectly, to any competitor, prior to the date and time of the official bid opening or of the awarding of the contract.

10. I am aware that, in addition and without prejudice to any other remedy provided to combat any restrictive practices related to bids and contracts, bids that are suspicious will be reported to the Competition Commission for investigation and possible imposition of administrative penalties in terms of section 59 of the Competition Act No 89 of 1998 and or may be reported to the National Prosecuting Authority (NPA) for criminal investigation and or may be restricted from conducting business with the public sector for a period not exceeding ten (10) years in terms of the Prevention and Combating of Corrupt Activities Act No 12 of 2004 or any other applicable legislation.

……	……
Signature	Date
……	……
Position	Name of Bidder

PART C: THE CONTRACT
Part C1: Agreement and Contract Data

PROJECT TITLE:	APPOINTMENT OF A CONTRACTOR FOR THE CONSTRUCTION OF VARIOUS INFRASTRUCTURE PROJECTS, INCLUDING INSTALLATION OF BIOSECURITY MEASURES AND RENOVATIONS TO ANIMAL ENCLOSURES, FOR THE SOUTH AFRICAN NATIONAL BIODIVERSITY INSTITUTE (SANBI) AT THE NATIONAL ZOOLOGICAL GARDEN IN PRETORIA
CONTRACT NO:	**SANBI: NZG412/2022**

C1.1 Form of Offer and Acceptance

The Employer, identified in the Acceptance signature block, has solicited offers to enter into a contract for the appointment of a contractor for the demolition of the timber deck at Eagle's Fare restaurant at the Walter Sisulu National Botanical Garden and the design and construction of a new complaint replacement composite deck, complete with supports, handrails, staircases and ramps**.**

The tenderer, identified in the Offer signature block, has examined the documents listed in the Tender Data and addenda thereto as listed in the Returnable Schedules, and by submitting this Offer has accepted the Conditions of Tender.

The tenderer, identified in the Offer signature block, has examined the draft contract as listed in the Acceptance section and agreed to provide this Offer.

By the representative of the tenderer, deemed to be duly authorised, signing this part of this Form of Offer and Acceptance the tenderer offers to perform all of the obligations and liabilities of the **Contractor** under the contract including compliance with all its terms and conditions according to their true intent and meaning for an amount to be determined in accordance with the conditions of contract identified in the Contract Data.

THE OFFERED TOTAL OF THE PRICES INCLUSIVE OF VAT IS:

(in words) ..... Rand;

R ..... (in figures)

THE OFFERED PRICES ARE AS STATED IN THE PRICING SCHEDULE

This Offer may be accepted by the Employer by signing the Acceptance part of this Form of Offer and Acceptance and returning one copy of this document including the Schedule of Deviations (if any) to the tenderer before the end of the period of validity stated in the Tender Data, or other period as agreed, whereupon the tenderer becomes the party named as the **Contractor** in the conditions of contract identified in the Contract Data.

Signature(s) .....

Name(s) .....

Capacity .....

For the Tenderer: .....

.....

.....

Name & signature of witness ..... Date .....

.....

Any reference to words "Bid" or Bidder" herein and/or in any other documentation shall be construed to have the same meaning as the words "Tender" or "Tenderer".

Acceptance

By signing this part of this Form of Offer and Acceptance, the Employer identified below accepts the tenderer's Offer. In consideration thereof, the Employer shall pay the Contractor the amount due in accordance with the conditions of contract identified in the Contract Data. Acceptance of the tenderer's Offer shall form an agreement between the Employer and the tenderer upon the terms and conditions contained in this agreement and in the contract that is the subject of this agreement.

The terms of the Contract are contained in

Part C1 Agreements and Contract Data *[which includes this Agreement]*

Part C2 Pricing Data

Part C3 Scope of Work

Part C4 Site Information

and drawings and documents or parts thereof, which may be incorporated by reference into Parts C1 to C4 above.

Deviations from and amendments to the documents listed in the Tender Data and any Addenda thereto listed in the Tender Schedules, as well as any changes to the terms of the Offer agreed by the Tenderer and the Employer during this process of offer and acceptance, are contained in the Schedule of Deviations attached to and forming part of this Agreement. No amendments to or deviations from the said documents are valid unless contained in this Schedule, which must be duly signed by the authorised representative(s) of both parties.

The Tenderer shall within the time required to submit documentation in accordance with clause 5.3.2 of the Contract Data (C1.2) after receiving a completed copy of this Agreement, including the Schedule of Deviations (if any), contact the Employer's agent (whose details are given in the Contract Data) to arrange the delivery of any bonds, guarantees, proof of insurance and any other documentation to be provided in terms of the Conditions of Contract identified in the Contract Data at, or just after, the date this Agreement comes into effect. Failure to fulfil any of these obligations in accordance with those terms shall constitute a repudiation of this Agreement.

Notwithstanding anything contained herein, this Agreement comes into effect on the date when the Tenderer receives one fully completed original copy of this document, including the Schedule of Deviations (if any). Unless the Tenderer (now Contractor) within five working days of the date of such receipt notifies the Employer in writing of any reason why he cannot accept the contents of this Agreement, this Agreement shall constitute a binding Contract between the parties.

Signature(s) .....

Name(s) .....

Capacity .....

For the Employer: .....

.....

.....
(Insert name and address of organisation)

Name & signature of witness ..... Date .....

.....

Any reference to words "Bid" or Bidder" herein and/or in any other documentation shall be construed to have the same meaning as the words "Tender" or "Tenderer".

Schedule of Deviations

1 Subject .....

Details .....

.....

.....

.....

2 Subject .....

Details .....

.....

.....

.....

3 Subject .....

Details .....

.....

.....

.....

4 Subject .....

Details .....

.....

.....

.....

5 Subject .....

Details .....

.....

.....

.....

By the duly authorised representatives signing this Schedule of Deviations, the Employer and the Tenderer agree to and accept the foregoing Schedule of Deviations as the only deviations from and amendments to the documents listed in the Tender Data and Addenda thereto as listed in the Tender Schedules, as well as any confirmation, clarification or change to the terms of the offer agreed by the Tenderer and the Employer during this process of offer and acceptance.

It is expressly agreed that no other matter whether in writing, oral communication or implied during the period between the issue of the Tender Documents and the receipt by the Tenderer of a completed signed copy of this Agreement shall have any meaning or effect in the Contract between the parties arising from this Agreement.

FOR THE TENDERER:

Signature(s) ....

Name(s) ....

Capacity ....

.....
[Name and address of organisation]

Name and signature of witness ..... Date .....

FOR THE EMPLOYER:

Signature(s) ....

Name(s) ....

Capacity ....

.....
[Name and address of organisation]

Name and signature of witness ..... Date .....

CONFIRMATION OF RECEIPT

The Tenderer (now Contractor), identified in the Offer part of this Agreement, hereby confirms receipt from the Employer, identified in the Acceptance part of this Agreement, of one fully completed original copy of this Agreement, including the Schedule of Deviations (if any) today:

The..... *[day]*

of ..... *[month]*

20.....*[year]*

at .....*[place]*

For the Contractor: .....
Signature

.....
Name

.....
Capacity

Signature and name of witness: .....
Signature

.....
Name

PART C: THE CONTRACT
Part C1: Agreement and Contract Data

PROJECT TITLE:	APPOINTMENT OF A CONTRACTOR FOR THE CONSTRUCTION OF VARIOUS INFRASTRUCTURE PROJECTS, INCLUDING INSTALLATION OF BIOSECURITY MEASURES AND RENOVATIONS TO ANIMAL ENCLOSURES, FOR THE SOUTH AFRICAN NATIONAL BIODIVERSITY INSTITUTE (SANBI) AT THE NATIONAL ZOOLOGICAL GARDEN IN PRETORIA
CONTRACT NO:	**SANBI: NZG412/2022**

C.1.2 Contract Data

C.1.2 Contract Data

The Conditions of Contract are the *General Conditions of Contract for Construction Works (Third Edition,2nd print, 2015)* published by the South African Institution of Civil Engineering. Copies of these conditions of contract may be obtained from the South African Institution of Civil Engineering (Tel: 011-805 5947).

Each item of data given below is cross-referenced to the clause in the Conditions of Contract to which it mainly applies.

Part 1: Data provided by the Employer

Clause	Data
1.1.1.13	**Clause 1.1.1.13: Defects Liability Period** The Defects Liability Period is **12 months,** measured from the date of the Certificate of Completion
1.1.1.14	**Clause 1.1.1.14: Due Completion Date** The time for achieving Practical Completion is as follows: **10 *Months*** after the Commencement date
1.1.1.15	The name of the Employer is **The South African National Biodiversity Institute,** represented by Mr Tanaka Mupudzi and/or such persons or person duly authorised thereto be the Employer in writing.
1.2.1.2	The Employer's address for receipt of communications is: **Delivery Address:** **Attention:** Deputy Director: Supply Chain Management Pretoria National Botanical Garden Biodiversity Centre, 2 Cussonia Avenue Brummeria, Pretoria **Postal Address:** **Attention:** Deputy Director: Supply Chain Management South African National Biodiversity Institute Private Bag X101 Silverton, Gauteng 0184

1.1.1.16	The name of the Engineer is **Jendza Capital (Pty) Ltd**
1.2.1.2	The address of the Engineer is: 6 Bates House Tybalt Place Waterfall Office Park Bekker Road Midrand 1685
1.1.1.26	**Clause 1.3.: Pricing Strategy** The Pricing Strategy is a re-measurement contract.
3.1.3	**Clause 3.1.3: Specific Approval of the Employer Required** The Engineer is required to obtain the specific approval of the Employer before executing any of the following functions or duties: 1 Clause 6.3: Variations 2 Clause 5.11.1: Suspension of the Works 3 Clause 5.12: Extension of Time for Practical Completion
3.2.3	**Clause 3.2.3: Specific Approval of the Employer Required** The Employer's Agent is required to obtain the specific approval of the Employer before executing any of the following functions or duties: 1 Clause 6.3: Variations 2 Clause 5.11.1: Suspension of the Works 3 Clause 5.12: Extension of Time for Practical Completion
5.3.1	**Clause 5.3.1: Commencement of the Works** The documentation required before commencement with Works execution are: Health and Safety Plan (Refer to Clause 4.3) Initial programme (Refer to Clause 5.6) Security (Refer to Clause 6.2) Insurance (Refer to Clause 8.6) Cash flow projection

5.3.2	**Clause 5.3.2: Timeframe to deliver documentation** The time to submit the documentation required before commencement with Works execution is twenty-one (21) days.
5.3.3	**Clause 5.3.3: Time to instruct commencement of the Works** *Add the following to Clause 5.3.3 after the last sentence:* "The Contractor shall not commence working until they have an approved project specific health and safety plan in terms of the Occupational Health and Safety Act, 1993: Construction Regulations, 2014 and complied with the initial requirements thereof."
5.4.2	The access and possession of Site shall not be exclusive to the Contractor but as set out in the Site Information.
5.8.1	**Clause 5.8.1: Non-Working Times** The non-working days are Saturdays and Sundays. The special non-working days are: 1. All gazetted public holidays falling outside the year end break. 2. The year-end break
5.12.2.	**Clause 5.12.2.: Some reasons for extension of time** **Clause 5.12.2.2: Abnormal climatic conditions.** *Add the following:* Regardless of the cause of any delay an extension of time will only be considered if it can be shown that the activity delayed is on the critical path indicated on the Programme of Works (Clause 5.6.1). No extension of time will be granted in respect of any delays attributed to normal climatic conditions. Normal Climatic Conditions shall be deemed to include normal rainfall and associated wet conditions and materials, strong winds and extremes of temperature. However, in the event that delays to critical activities exceed the number of working days listed below for each month, then abnormal climatic conditions shall be deemed to exist, and an extension of time shall be granted in accordance with the provisions of that Clause. The number of days quoted below shall be regarded as a fair estimate of the delays to be anticipated and allowed for under normal climatic conditions where inclement weather prevents or disrupts work on the critical path. January 3 days May 1 days September 1 days February 6 days June 1 days October 2 days March 7 days July 1 days DECEMBER 2 days April 5 days August 1 days December 4 days Claims for delays for abnormal climatic conditions shall be accompanied by substantiating facts and evidence, which shall be submitted timeously as each day or half-day delay is experienced. Should an extension of time be granted by the Engineer such extension of time will be added to the Time for Completion. It shall be further noted that where the critical path is not affected, no extension of time for abnormal climatic conditions or for any other reason will be entertained. Rainfall of 10mm or less per day shall be deemed to be normal climatic conditions.

5.13.1	**Clause 5.13.1: Penalty for Delay** The penalty for failing to complete the Works is R 43 000.00 per day.
5.14.1	**Clause 5.14.1: Practical completion** The requirements for achieving Practical Completion are: Works to reach a state of readiness fit for intended purpose and occupation without danger/undue inconvenience to the Employer/public.
5.14.2	**Clause 5.14.2: Issue of Certificate of Practical Completion** *Replace* "the Employer's Agent" *in the second and third lines with the following*: ", the Contractor shall notify the Employer's Agent, who shall inspect the Works and the Employer's Agent"
5.14.4	**Clause 5.14.4: Certificate of Completion** *Replace* "the Employer's Agent" *in the third line of the first paragraph with*: ", the Contractor shall notify the Employer's Agent, who shall inspect the works and the Employer's Agent"
5.16.3	**Clause 5.16.3: Latent defect liability** The latent defect period is five (5) years for building works.
6.2	**Clause 6.2: Security** The Form of Guarantee is to contain the wording of the pro-forma document as per the contract document. The liability of the guarantee shall be for 10% of the Approved Contract Sum.
6.8.2	**Clause 6.8.2: Contract Price Adjustment** Contract Price Adjustment **<u>is not applicable</u>**
6.8.3	**Clause 6.8.3: Variation in Cost of Special Materials** Price adjustments for variations in the costs of special materials are not allowed
6.10.1.5	**Clause 6.10.1.5: Interim Payments - Materials on Site** No percentage advance on materials on site but not yet built into the Permanent Works is allowed for, or will be paid.
6.10.3	**Clause 6.10.3: Retention Money** The percentage retention on the amounts due to the Contractor is 10% (ten percent). The limit of retention is 10% of the Contract Sum, including allowances for contingencies. This reduces to 5% upon the issue of the Certificate of Completion. The remaining 5% retention will be released upon the issue of the Final - Approval Certificate upon lapse of the defects liability period. Security plus Retention amount will not exceed 15% of the Contract Sum
6.10.4	**Clause 6.10.4: Delivery, dissatisfaction with and payment of payment certificate** *Replace* “28 days” *in the second last sentence with* “30 days”
6.10.6	**Clause 6.10.6: Set-Off and Delayed Payments** A guarantee in lieu of retention is not permitted

6.10.6.2	**Clause 6.10.6.2: Set-Off and Delayed Payments** *Replace the words* "prime overdraft rate certified by the Contractor's banker" *with the words* "interest rate as determined by the Minister of Finance, from time to time, in terms of section 80(1)(b) of the Public Finance Management Act, 1999 (Act No. 1 of 1999), will apply"
6.10.8	**Clause 6.10.8: Contractor's completion statement** *Replace* "28 days" *in the last sentence with* "30 days"
6.10.9	**Clause 6.10.9: Final payment certificate** *Replace* "28 days" *in the last sentence with* "30 days"
6.12	**Clause 6.12: Additional** *Add Clause 6.12 as follows:* In respect of any amount owed by the Contractor to the Employer, the Contractor shall pay the Employer interest at the rate as determined by the Minister of Finance, from time to time, in terms of section 80(1)(b) of the Public Finance Management Act, 1999 (Act No. 1 of 1999), will apply
8.6.1	**Clause 8.6.1: Insurance** *Add the following:* **Damage to the Works** (a) Without in any way limiting the Contractor's obligations in terms of the Contract, the Contractor shall bear the full risk of damage to and/or destruction of the Works by whatever cause during construction of the Works and hereby indemnifies and holds harmless the Employer against any such damage. The Contractor shall take such precautions and security measures and other steps for the protection and security of the Works, as he may deem necessary. (b) The Contractor shall at all times proceed immediately to remove or dispose of any debris arising from damage to or destruction of the Works and to rebuild, restore, replace and/or repair the Works. (c) The Employer shall carry the risk of damage to or destruction of the Works and material paid for by the Employer that is the result, whether direct or indirect or proximate or remote, of the excepted risks as set out in Clause 8.6.2. (d) Where the Employer bears the risk in terms of this Contract, the Contractor shall, if requested to do so, reinstate any damage or destroyed portions of the Works and the costs of such reinstatement shall be measured and valued in terms of Clause 6.7 hereof. .
8.6.1.1.2	**Clause 8.6.1.1.2: Insurance** The value of the materials supplied by the Employer to be included in the insurance sum is -Nil.
8.6.1.1.3	**Clause 8.6.1.1.3: Insurance** The amount to cover professional fees for repairing damage and loss to be included in the insurance sum is -Nil.
8.6.1.3	**Clause 8.6.1.3: Insurance** The limit of indemnity for liability insurance is R10 000 000.00 for any single claim – the number of claims to be unlimited during the construction.

8.6.1.5	**Clause 8.6.1.5: Additional Insurance** Additional Insurance is required for the following: a) Where the contract involves manufacturing and/or fabrication of the works or part thereof at premises other than the Site, the Contractor shall satisfy the Employer that all materials and equipment for incorporation in the works are adequately insured during manufacture and/or fabrication. In the event of the Employer having an insurable interest in such works during manufacture or fabrication then such interest shall be noted by endorsement to the Contractor's Policies of Insurance. .
10.1.5	**Clause 10.1.5: Employer's Agent's ruling on Contractor's Claim** *Add the following to Clause 10.1.5 before the last sentence*: "If the Employer's Agent does not respond in accordance with the foregoing procedure and timetable, either Party may consider that the claim has been rejected by the Employer's Agent and either Party may submit the dispute by issuing a Dispute Notice in terms of Clause 10.3.1.'
10.3.1	**Clause 10.3: Dispute Notice** *Replace Clause 10.3.1.1 with the following* "The dispute arises from any ruling.":
10.5, 10.6, 10.7	**Clause 10.5, 10.6, 10.7: Dispute Resolution** Dispute resolution shall be by **Arbitration**.
11	**Clause 12: Confidentiality** The Contractor shall treat the details of the Works comprised in this Contract as private and confidential (save in so far as may be necessary for the purposes hereof) and shall not publish or disclose the same or any particulars thereof in any trade or technical paper elsewhere without prior written consent of the Engineer.
12	**Clause 13: Amendments in writing** No amendments of this Contract or of any provisions or terms hereof and no waiver or relaxation or suspension of any of the provisions or terms of this Contract shall be of any force or effect unless reduced to writing and signed by both the parties hereto.

PART 2: DATA PROVIDED BY THE CONTRACTOR

Clause

1.1.1.9 The Contractor is ……

1.2.1.2 The Contractor's address for receipt of communications is:

Physical address:	Postal address:
.....	.....
.....	.....
.....	.....
.....	.....

Telephone: .....

Fax: .....

Email: .....

PART C: THE CONTRACT
Part C1: Agreement and Contract Data

PROJECT TITLE:	APPOINTMENT OF A CONTRACTOR FOR THE CONSTRUCTION OF VARIOUS INFRASTRUCTURE PROJECTS, INCLUDING INSTALLATION OF BIOSECURITY MEASURES AND RENOVATIONS TO ANIMAL ENCLOSURES, FOR THE SOUTH AFRICAN NATIONAL BIODIVERSITY INSTITUTE (SANBI) AT THE NATIONAL ZOOLOGICAL GARDEN IN PRETORIA
CONTRACT NO:	**SANBI: NZG412/2022**

C1.3 FORM OF CONSTRUCTION GUARANTEE

C1.3.1 PRO FORMA PERFORMANCE GUARANTEE

GUARANTOR DETAILS AND DEFINITIONS

"Guarantor" means: .....

Physical address: .....

"Employer" means: .....

"Contractor" means: .....

"Engineer" means: .....

"Works" means: .....

"Site" means: .....

"Contract" means: The Agreement made in terms of the Form of Offer and Acceptance and such amendments or additions to the Contract as may be agreed in writing between the parties.

"Contract Sum" means: The accepted amount inclusive of tax of R .....

Amount in words: .....

"Guaranteed Sum" means: The maximum aggregate amount of R.....

Amount in words: .....

"Expire Date" means: .....

CONTRACT DETAILS

Engineer issues: Interim Payment Certificates, Final Payment Certificate and the Certificate Completion of the Works as defined in the Contract.

PERFORMANCE GUARANTEE

1 The Guarantor's liability shall be limited to the amount of the Guaranteed Sum.

2 The Guarantor's period of liability shall be from and including the date of issue of this Performance Guarantee and up to and including the Expiry Date or the date of issue by the Engineer of the Certificate of Completion of the Works or the date of payment in full of the Guaranteed Sum, whichever occurs first. The Engineer and/or the Employer shall advise the Guarantor in writing of the date on which the Certificate of Completion of the Works has been issued.

3 The Guarantor hereby acknowledge that:

3.1 any reference in this Performance Guarantee to the Contract is made for the purpose of convenience and shall not be construed as any intention whatsoever to create an accessory obligation or any intention whatsoever to create a suretyship;

3.2 its obligation under this Performance Guarantee is restricted to the payment of money.

4 Subject to the Guarantor's maximum liability referred to in 1, the Guarantor hereby undertakes to pay the Employer the sum certified upon receipt of the documents identified in 4.1 to 4.3:

4.1 A copy of a first written demand issued by the Employer to the Contractor stating that payment of a sum certified by the Engineer in an Interim or Final Payment Certificate has not been made in terms of the Contract and failing such payment within seven (7) calendar days, the Employer intends to call upon the Guarantor to make payment in terms of 4.2;

4.2 A first written demand issued by the Employer to the guarantor at the Guarantor's physical address with a copy to the Contractor stating that a period of seven (7) days has elapsed since the first written demand in terms of 4.1 and the sum certified has still not been paid;

4.3 A copy of the aforesaid payment certificate which entitles the Employer to receive payment in terms of the Contract of the sum certified in 4.

5 Subject to the Guarantor's maximum liability referred to in 1, the Guarantor undertakes to pay to the Employer the Guaranteed Sum or the full outstanding balance upon receipt of a first written demand from the Employer to the Guarantor at the Guarantor's physical address calling up this Performance Guarantee, such demand stating that:

5.1 the Contract has been terminated due to the Contractor's default and that this Performance Guarantee is called up in terms of 5; or

5.2 a provisional or final sequestration or liquidation court order has been granted against the Contractor and that the Performance Guarantee is called up in terms of 5; and

5.3 the aforesaid written demand is accompanied by a copy of the notice of termination and/or the provisional/final sequestration and/or the provisional liquidation court order.

6 It is recorded that the aggregate amount of payments required to be made by the Guarantor in terms of 4 and 5 shall not exceed the Guarantor's maximum liability in terms of 1.

7 Where the Guarantor has made payment in terms of 5, the Employer shall upon the date of issue of the Final Payment Certificate submit an expense account to the Guarantor showing how all monies received in terms of this Performance Guarantee have been expended and shall refund to the Guarantor any resulting surplus. All monies refunded to the Guarantor in terms of this Performance Guarantee shall bear interest at the prime overdraft rate of the Employer's bank compounded

monthly and calculated from the date payment was made by the Guarantor to the Employer until the date of refund.

8 Payment by the Guarantor in terms of 4 or 5 shall be made within seven (7) calendar days upon receipt of the first written demand to the Guarantor.

9 Payment by the Guarantor in terms of 5 will only be made against the return of the original Performance Guarantee by the Employer.

10 The Employer shall have the absolute right to arrange his affairs with the Contractor in any manner which the Employer may deem fit and the Guarantor shall not have the right to claim his release from this Performance Guarantee on account of any conduct alleged to be prejudicial to the Guarantor.

11 The Guarantor chooses the physical address as stated above for the service of all notices for al purposes in connection herewith.

12 This Performance Guarantee is neither negotiable nor transferable and shall expire in terms of 2, where after no claims will be considered by the Guarantor. The original of this Guarantee shall be returned to the Guarantor after it has expired.

13 This Performance Guarantee, with the required demand notices in terms of 4 or 5, shall be regarded as a liquid document for the purposes of obtaining a court order.

14 Where this Performance Guarantee is issued in the Republic of South Africa the Guarantor hereby consents in terms of Section 45 of the Magistrate's Courts Act No 32 of 1944, as amended, to the jurisdiction of the Magistrate's Court of any district having jurisdiction in terms of Section 28 of the said Act, notwithstanding that the amount of the claim may exceed the jurisdiction of the Magistrate's Court.

Signed at .....

Date .....

Guarantor's signatory: (1) .....

Capacity.....

Guarantor's signatory: (2) .....

PART C: THE CONTRACT
Part C1: Agreement and Contract Data

PROJECT TITLE:	APPOINTMENT OF A CONTRACTOR FOR THE CONSTRUCTION OF VARIOUS INFRASTRUCTURE PROJECTS, INCLUDING INSTALLATION OF BIOSECURITY MEASURES AND RENOVATIONS TO ANIMAL ENCLOSURES, FOR THE SOUTH AFRICAN NATIONAL BIODIVERSITY INSTITUTE (SANBI) AT THE NATIONAL ZOOLOGICAL GARDEN IN PRETORIA
CONTRACT NO:	**SANBI: NZG412/2022**

C1.4 Occupational Health and Safety Agreement 37(2)

AGREEMENT MADE AND ENTERED INTO BETWEEN THE

.....

(Hereinafter called the **"EMPLOYER"**)

.....

(Contractor / Mandatary / Company / CC Name)

IN TERMS OF SECTION 37(2) OF THE OCCUPATIONAL HEALTH AND SAFETY ACT, ACT NO. 85 OF 1993 AS AMENDED

I, ..., representing

....., as an Employer in its own right, do hereby undertake to ensure, as far as is reasonably practicable, that all work will be performed, and all equipment, machinery or plant used in such a manner as to comply with the provisions of the Occupational Health and Safety Act (OHSA) and the Regulations promulgated there under.

I furthermore confirm that I am / we are registered with the Compensation Commissioner and that all registration and assessment monies due to the Compensation Commissioner have been fully paid or that I / we are insured with an approved licensed compensation insurer.

COID ACT Registration Number: .....

Or Compensation Insurer: ..... Policy No.: .....

I undertake to appoint, where required, suitable competent persons, in writing, in terms of the requirements of OHSA and the Regulations and to charge him / them with the duty of ensuring that the provisions of OHSA and Regulations as well as the Council's Special Conditions of Contract, Way Leave, Lock-Out and Work Permit Procedures are adhered to as far as reasonably practicable.

I further undertake to ensure that any Sub-contractors employed by me will enter into an Occupational Health and Safety Agreement separately, and that such Sub-contractors comply with the conditions set.

I hereby declare that I have read and understand the appended Occupational Health and Safety Conditions and undertake to comply therewith at all times.

I hereby also undertake to comply with the Occupational Health and Safety Specification and Plan.

Signed at ..... this ..... day of..... 20.....

....
WITNESS MANDATARY

Signed at ..... this ..... day of..... 20.....

....
WITNESS FOR AND ON BEHALF OF THE EMPLOYER

OCCUPATIONAL HEALTH AND SAFETY CONDITIONS

1. The Chief Executive Officer of the Contractor shall assume the responsibility in terms of Section 16(1) of the Occupational Health and Safety Act (as amended). Should the Contractor assign any duty in terms of Section 16(2), a copy of such assignment shall immediately be provided to the representative of the Employer as defined in the Contract.

2. All work performed on the Employer's premises shall be performed under the supervision of the construction supervisor who understand the hazards associated with any work that the Contractor performs on the site in terms of Construction Regulations 2003.

3. The Contractor shall appoint a Competent Person who shall be trained on any occupational health and safety aspect pertaining to them or to the work that is to be performed.

4. The Contractor shall ensure that he familiarises himself with the requirements of the Occupational Health and Safety Act and that he, his employees, and any sub-contractors, comply with them.

5. Discipline in the interests of occupational health and safety shall be strictly enforced.

6. Personal protective equipment shall be issued by the Contractor as required and shall be worn at all times where necessary.

7. Written safe work procedures and appropriate precautionary measures shall be available and enforced, and all employees shall be made conversant with the contents of these practices.

8. No substandard equipment/machinery/articles or substances shall be used on the site.

9. All incidents referred to in terms of Section 24 of the Occupational Health and Safety Act shall be reported by the Contractor to the Department of Labour and the Employer.

10 The Employer hereby obtains an interest in the issue of any formal inquiry conducted in terms of Section 32 of the Occupational Health and Safety Act and into any incident involving a Contractor and/or his employees and/or his Sub-Contractor/s.

11. No use shall be made of any of the Employer's machinery / plant / equipment / substance / personal protective equipment or any other article without prior arrangement and written approval.

12. No alcohol or any other intoxicating substance shall be allowed on the site. Any person suspected of being under the influence of alcohol or any other intoxicating substance shall not be permitted access to, or allowed to remain on the site.

13. Prior to commencement of any work, verified copies of all documents mentioned in the agreement, must be presented to the Employer.

PART C: THE CONTRACT
Part C2: Pricing Data

PROJECT TITLE:	APPOINTMENT OF A CONTRACTOR FOR THE CONSTRUCTION OF VARIOUS INFRASTRUCTURE PROJECTS, INCLUDING INSTALLATION OF BIOSECURITY MEASURES AND RENOVATIONS TO ANIMAL ENCLOSURES, FOR THE SOUTH AFRICAN NATIONAL BIODIVERSITY INSTITUTE (SANBI) AT THE NATIONAL ZOOLOGICAL GARDEN IN PRETORIA
CONTRACT NO:	**SANBI: NZG412/2022**

		Page
C2.1	Notes to Tenderer	92
C2.2	Bill of Quantities	94

Any reference to words “Bid” or Bidder” herein and/or in any other documentation shall be construed to have the same meaning as the words “Tender” or “Tenderer”.

PART C: THE CONTRACT
Part C2: Pricing Data

PROJECT TITLE:	APPOINTMENT OF A CONTRACTOR FOR THE CONSTRUCTION OF VARIOUS INFRASTRUCTURE PROJECTS, INCLUDING INSTALLATION OF BIOSECURITY MEASURES AND RENOVATIONS TO ANIMAL ENCLOSURES, FOR THE SOUTH AFRICAN NATIONAL BIODIVERSITY INSTITUTE (SANBI) AT THE NATIONAL ZOOLOGICAL GARDEN IN PRETORIA
CONTRACT NO:	**SANBI: NZG412/2022**

C2.1 Notes to Tenderer

C2.1.1 Project Description

The scope of work covered by this contract comprises the following additions and or alterations to:

- Biosecurity measures for trucks
- Foot baths for pedestrians
- Baboon Row
- Circular mammal enclosures
- Parrot Row
- Back of Raptors
- Raptor Row
- Ground Hornbill camps 1
- Ground Hornbill camps 2
- Ground Hornbill camps 3
- Ground Hornbill camps 4
- Duck pond
- Australian bird enclosure
- New Crane Camp (Behind baboon row)
- Chicken rows
- Back of House: Free Standing Parrot Row
- Back of House: Masonry Structure Bird Row

C2.1.2. General Notes

2.1 The tenderer's attention is drawn to, inter alia, the following as contained in this document:

2.1.1 The agreement is to be the JBCC® Principal Building Agreement (May 2018 Edition 6.2) prepared by the Joint Building Contracts Committee ® - NPC shall be the applicable building agreement, amended as hereinafter described, together with the associated documentation as prepared by the Joint Building Contracts Committee (JBCC)

2.1.2 The Bills of Quantities have been drawn up in accordance with the "Standard System of Measuring Building Work Seventh Edition (Revised 2015)" published by the Association of South African Quantity Surveyors

2.1.3 The General Preambles for Trades (2017 edition), as published by the Association of South African Quantity Surveyors, shall be deemed to be incorporated in the bills of quantities and no claims arising from brevity of description of items, fully described in the said General Preambles, will be entertained

2.1.4 "Supplementary Preambles" are incorporated in the bills of quantities to satisfy the requirements of the project and shall take precedence over the provisions of the said General Preambles

2.1.5 Descriptions in the Bills of Quantities are abbreviated and comply generally with those in the said General Preambles

2.1.6 The units of measurement described in the Bills of Quantities are metric units. Abbreviations which may be used in the Bills of Quantities are as follows:

mm	=	millimetre	m	=	linear metre
m2	=	square metre	m3	=	cubic metre
km	=	kilometre	ha	=	hectare
h	=	hour	kg	=	kilogram
t	=	ton	L	=	litre
kl	=	kilolitre	kN	=	kiloweton
MN	=	meganewton	MPa	=	megapascal
kW	=	kilowatt	%	=	percent
No	=	number	sum	=	lump sum
PC Sum	=	Prime Cost Sum			
Prov Sum	=	Provisional Sum			

PART C: THE CONTRACT
Part C2: Pricing Data

PROJECT TITLE:	APPOINTMENT OF A CONTRACTOR FOR THE CONSTRUCTION OF VARIOUS INFRASTRUCTURE PROJECTS, INCLUDING INSTALLATION OF BIOSECURITY MEASURES AND RENOVATIONS TO ANIMAL ENCLOSURES, FOR THE SOUTH AFRICAN NATIONAL BIODIVERSITY INSTITUTE (SANBI) AT THE NATIONAL ZOOLOGICAL GARDEN IN PRETORIA
CONTRACT NO:	**SANBI: NZG412/2022**

C2.2 Bills of Quantities

Provisional Bills of Quantities

for the

INSTALLATION OF BIOSECURITY MEASURES
AND
RENOVATIONS TO MAMMAL ENCLOSURES

at the

NATIONAL ZOOLOGICAL GARDEN IN PRETORIA

for the

South African National Biodiversity Institute

January 2022

Cover

South African National Biodiversity Institute

Installation of Biosecurity Measures and Renovations to Mammal Enclosures

TABLE OF CONTENTS

Notes to Tenderer

Provisional Bill of Quantities

Section 1: Preliminary and General

Section 2: Building Works

Section 3: Budgetary Allowances

FINAL SUMMARY

Table of Contents

South African National Biodiversity Institute

Installation of Biosecurity Measures and Renovations to Mammal Enclosures

GENERAL NOTES & INVITATION TO TENDER

1. PROJECT DESCRIPTION

The scope of work covered by this contract comprises the following additions and or alterations to:

- Biosecurity measures for trucks
- Foot baths for visitors
- Baboon Row
- Circular bird enclosures
- Parrot Row
- Back of House
- Back of Raptor
- Raptor Row
- Ground Hornbill camps 1
- Ground Hornbill camps 2
- Ground Hornbill camps 3
- Ground Hornbill camps 4
- Duck pond
- Australian bird enclosure
- New Crane Camp (Behind baboon Row)
- Chicken rows
- Back of House: Free Standing Parrot Row
- Back of House: Masonry Structure Bird Row

2. GENERAL NOTES

2.1 The tenderer's attention is drawn to, inter alia, the following as contained in this document:

2.1.1 The agreement is to be the The JBCC® Principal Building Agreement (May 2018 Edition 6.2) prepared by the Joint Building Contracts Committee ® - NPC shall be the applicable building agreement, amended as hereinafter described, together with the associated documentation as prepared by the Joint Building Contracts Committee (JBCC)

2.1.2 The Bills of Quantities have been drawn up in accordance with the "Standard System of Measuring Building Work Seventh Edition (Revised 2015)" published by the Association of South African Quantity Surveyors

2.1.3 The General Preambles for Trades (2017 edition), as published by the Association of South African Quantity Surveyors, shall be deemed to be incorporated in the bills of quantities and no claims arising from brevity of description of items, fully described in the said General Preambles, will be entertained

Notes to Tenderer

2.1.4 "Supplementary Preambles" are incorporated in the bills of quantities to satisfy the requirements of the project and shall take precedence over the provisions of the said General Preambles

2.1.5 Descriptions in the Bills of Quantities are abbreviated and comply generally with those in the said General Preambles

2.1.6 The units of measurement described in the Bills of Quantities are metric units. Abbreviations which may be used in the Bills of Quantities are as follows:

mm	=	millimetre	m	=	linear metre
m2	=	square metre	m3	=	cubic metre
km	=	kilometre	ha	=	hectare
h	=	hour	kg	=	kilogram
t	=	ton	L	=	litre
kl	=	kilolitre	kN	=	kiloweton
MN	=	meganewton	MPa	=	megapascal
kW	=	kilowatt	%	=	percent
No	=	number	sum	=	lump sum
PC Sum	=	Prime Cost Sum			
Prov Sum	=	Provisional Sum			

Notes to Tenderer

Item No		Quantity	Rate	Amount	
	SECTION 1 **BILL NO 1** **PRELIMINARIES** - **BUILDING AGREEMENT AND PRELIMINARIES** The JBCC® Principal Building Agreement (May 2018 Edition 6.2) prepared by the Joint Building Contracts Committee ® - NPC shall be the applicable building agreement, amended as hereinafter described, together with the associated documentation as prepared by the Joint Building Contracts Committee (JBCC) The General Preliminaries Edition - May 2018/2020 as published by the Joint Building Contracts Committee ® - NPC for use with the said **JBCC** Principal Building Agreement shall be deemed to be incorporated in these bills of quantities The Contractor is deemed to have referred to the abovementioned documents for the full intent and meaning of each clause thereof These clauses are hereinafter referred to by clause number and heading only. Where standard clauses or alternatives are not entirely applicable to this contract such modifications, corrections or supplements as will apply are given under each relevant clause heading and such modifications, corrections or supplements shall take precedence notwithstanding anything contrary contained in the abovementioned documents Where any item is not relevant to this specific contract, such item is marked N/A, signifying "not applicable" The Bills of Quantities have been drawn up in accordance with the "Standard System of Measuring Building Work Seventh Edition (Revised 2015)" published by The South African Association of Quantity Surveyors				
	Carried Forward		R		
	Section No. 1 Bill No. 1 Preliminaries and General				

	Brought Forward		R		
	The quantities or specifications contained in these bills of quantities are not to be used for the calculation or ordering of materials				
	PREAMBLES FOR TRADES				
	The General Preambles for Trades (2017 edition) as published by The Association of South African Quantity Surveyors shall be deemed to be incorporated in these bills of quantities and no claims arising from brevity of description of items fully described in the said Model Preambles will be entertained				
	Supplementary preambles are incorporated in these bills of quantities to satisfy the requirements of this project. Such supplementary preambles shall take precedence over the provisions of the said Model Preambles				
	Where Architect's or Engineer's specifications or drawings (where issued) are in conflict with the General Preambles for Trades 2017 or any Supplementary Preambles, the Architect's or Engineer's specification and drawings, as the case may be, are to take preference. Where the drawings and Architect's or Engineer's specifications are in conflict, the **Contractor** is to obtain written clarification from the **Principal Agent** prior to the closing of tenders.				
	The **Contractor's** prices for all items throughout these bills of quantities must take account of and include for all of the obligations, requirements and specifications given in the said Model Preambles and in any supplementary preambles, drawings and/or specifications				
	Carried Forward		R		
	Section No. 1 Bill No. 1 Preliminaries and General				

	Brought Forward		R		
	PRICING OF PRELIMINARIES Should the Contractor select Option A in terms of clause 26.0 in the Contract Data for the purpose of adjustment of these preliminaries, the amount entered into the amount column in these preliminaries is to be divided into one or more of the three categories provided, namely: F - An amount which shall not be varied (Fixed) V - An amount which shall be varied in proportion to the **contract value** as compared with the **contract sum** (Value) T - An amount which shall be varied in proportion to the **construction period** as compared to the initial c**onstruction period** excluding revisions to the **construction period** for which the **Contractor** is not entitled to adjustment of the **contract value** in terms of the **agreement** (Time)				
	Carried Forward		R		
	Section No. 1 Bill No. 1 Preliminaries and General				

	Brought Forward		R		
	SECTION A: PRINCIPAL BUILDING AGREEMENT				
	INTERPRETATION				
1	1.0 Definitions and interpretation				
	F: ..... V: ..... T:	Item			
2	2.0 Law, regulations and notices				
	Occupational Health and safety Act 1993				
	Without limiting the generality of the provisions of clause 2.0 of the agreement, the **Contractor's** attention is drawn to the provisions of the Construction Regulations, 2003 issued in terms of the Occupational Health and Safety Act, 1993 in which it is specifically stated that the **Employer** shall prepare a documented health and safety specification for the works as contained in the **"Project Health and Safety Specification prepared by HSE Global (Pty) Ltd"** accompanying this tender document, and that the **Employer** shall ensure that the **Contractor** has made provision for the cost of health and safety measures during the execution of the works. The **Contractor** shall price **"Section 1, Bill 2 Occupational Health and Safety"** for compliance with the act and the regulations and the provisions of the aforementioned health and safety specification				
	F: ..... V: ..... T:	Item			
3	3.0 Offer and acceptance				
	F: ..... V: ..... T:	Item			
4	4.0 Cession and assignment				
	F: ..... V: ..... T:	Item			
5	5.0 Documents				
	F: ..... V: ..... T:	Item			
6	6.0 Employer's agents				
	F: ..... V: ..... T:	Item			
	Carried Forward		R		
	Section No. 1 Bill No. 1 Preliminaries and General				

	Brought Forward		R		
7	7.0 Design responsibility				
	F: ..... V: ..... T:	Item			
	INSURANCE AND SECURITY				
8	8.0 Works risk				
	Clause 8.4: Delete				
	F: ..... V: ..... T:	Item			
9	9.0 Indemnities				
	Clause 9.2.7: Delete				
	F: ..... V: ..... T:	Item			
10	10.0 Insurances				
	F: ..... V: ..... T:	Item			
11	11.0 Securities				
	F: ..... V: ..... T:	Item			
	EXECUTION				
12	12.0 Obligations of the parties				
	F: ..... V: ..... T:	Item			
13	13.0 Setting out				
	F: ..... V: ..... T:	Item			
14	14.0 Nominated subcontractors				
	F: ..... V: ..... T:	Item			
15	15.0 Selected subcontractors				
	F: ..... V: ..... T:	Item			
16	16.0 Direct contractors				
	F: ..... V: ..... T:	Item			
	Carried Forward		R		
	Section No. 1 Bill No. 1 Preliminaries and General				

	Brought Forward		R		
17	17.0 Contract instructions				
	F: ..... V: ..... T:	Item			
	COMPLETION				
18	18.0 Interim completion				
	F: ..... V: ..... T:	Item			
19	19.0 Practical completion				
	F: ..... V: ..... T:	Item			
20	20.0 Completion in sections				
	F: ..... V: ..... T:	Item			
21	21.0 Defects liability period and final completion				
	F: ..... V: ..... T:	Item			
22	22.0 Latent defects liability period				
	F: ..... V: ..... T:	Item			
23	23.0 Revision of date for practical completion				
	F: ..... V: ..... T:	Item			
24	24.0 Penalty for late or non-completion				
	F: ..... V: ..... T:	Item			
	PAYMENT				
25	25.0 Payment				
	F: ..... V: ..... T:	Item			
26	26.0 Adjustment to the contract value and final account				
	F: ..... V: ..... T:	Item			
27	27.0 Recovery of expense and/or loss				
	F: ..... V: ..... T:	Item			
	Carried Forward		R		
	Section No. 1 Bill No. 1 Preliminaries and General				

	Brought Forward		R		
	SUSPENSION AND TERMINATION				
28	28.0 Suspension by the contractor				
	F: ..... V: ..... T:	Item			
29	29.0 Termination				
	F: ..... V: ..... T:	Item			
	DISPUTE RESOLUTION				
30	40.0 Dispute resolution				
	F: ..... V: ..... T:	Item			
	AGREEMENT				
31	Post tender information agreed with the Contractor				
	F: ..... V: ..... T:	Item			
	Carried Forward		R		
	Section No. 1 Bill No. 1 Preliminaries and General				

	Brought Forward		R		
	SECTION B: PRELIMINARIES				
	1.0 DEFINITIONS AND INTERPRETATION				
32	1.1 Definitions				
	F: ..... V: ..... T:	Item			
33	1.2 Interpretation				
	F: ..... V: ..... T:	Item			
	2.0 DOCUMENTS				
34	2.1 Checking of documents				
	F: ..... V: ..... T:	Item			
35	2.2 Provisional bills of quantities				
	F: ..... V: ..... T:	Item			
36	2.3 Availability of construction documentation				
	F: ..... V: ..... T:	Item			
37	2.4 Ordering of **materials and goods**				
	The quantities or specifications contained in these bills of quantities are **not** to be used for the ordering of materials and goods				
	F: ..... V: ..... T:	Item			
	3.0 PREVIOUS WORK AND ADJOINING PROPERTIES				
38	3.1 Previous work - dimensional accuracy				
	F: ..... V: ..... T:	Item			
39	3.2 Previous work - defects				
	F: ..... V: ..... T:	Item			
40	3.3 Inspection of adjoining properties				
	F: ..... V: ..... T:	Item			
	Carried Forward		R		
	Section No. 1 Bill No. 1 Preliminaries and General				

	Brought Forward		R		
	4.0 THE SITE				
41	4.1 Handover of site in stages				
	F: ..... V: ..... T:	Item			
42	4.2 Enclosure of the **works**				
	F: ..... V: ..... T:	Item			
43	4.3 Geotechnical investigation				
	F: ..... V: ..... T:	Item			
44	4.4 Encroachments				
	F: ..... V: ..... T:	Item			
45	4.5 Existing premises occupied				
	F: ..... V: ..... T:	Item			
46	4.6 Services - known				
	F: ..... V: ..... T:	Item			
	5.0 MANAGEMENT OF CONTRACT				
47	5.1 Management of the works				
	F: ..... V: ..... T:	Item			
48	5.2 Progress meetings				
	F: ..... V: ..... T:	Item			
49	5.3 Technical meetings				
	F: ..... V: ..... T:	Item			
	6.0 SAMPLES, SHOP DRAWINGS, ETC				
50	6.1 Samples of materials				
	F: ..... V: ..... T:	Item			
51	6.2 Workmanship samples				
	F: ..... V: ..... T:	Item			
	Carried Forward		R		
	Section No. 1 Bill No. 1 Preliminaries and General				

	Brought Forward		R		
52	6.3 Shop drawings				
	F: ..... V: ..... T:	Item			
53	6.4 Compliance with manufacturers' instructions				
	F: ..... V: ..... T:	Item			
	7.0 DEPOSITS AND FEES				
54	7.1 Deposits and fees				
	F: ..... V: ..... T:	Item			
	8.0 TEMPORARY SERVICES				
	The contractor shall agree the location of all temporary services with the principal agent before installation and on completion remove the same and make good				
55	8.1 Water				
	F: ..... V: ..... T:	Item			
56	8.2 Electricity				
	F: ..... V: ..... T:	Item			
57	8.3 Ablution and welfare facilities				
	F: ..... V: ..... T:	Item			
58	8.4 Communication facilities				
	F: ..... V: ..... T:	Item			
	9.0 PRIME COST AMOUNTS				
59	9.1 Responsibility for **prime cost amounts**				
	F: ..... V: ..... T:	Item			
	10.0 ATTENDANCE ON SUBCONTRACTORS				
60	10.1 General attendance				
	F: ..... V: ..... T:	Item			
	Carried Forward		R		
	Section No. 1 Bill No. 1 Preliminaries and General				

	Brought Forward		R		
61	10.2 Special attendance				
	F: ..... V: ..... T:	Item			
	11.0 GENERAL				
62	11.1 Protection of the **works**				
	F: ..... V: ..... T:	Item			
63	11.2 Protection/isolation of existing/sectionally occupied **works**				
	F: ..... V: ..... T:	Item			
64	11.3 Security of the works				
	F: ..... V: ..... T:	Item			
65	11.4 Notice before covering work				
	F: ..... V: ..... T:	Item			
66	11.5 Disturbance				
	F: ..... V: ..... T:	Item			
67	11.6 Environmental disturbance				
	F: ..... V: ..... T:	Item			
68	11.7 **Works** cleaning and clearing				
	Clause 11.7 is amended by adding the following:				
	No claims for clearing or carting away any earth, rubbish or superfluous materials, including that of any subcontractor, shall be accepted. All such materials must be cleared regularly and in addition as and when directed by the Principal Agent.				
	The Contractor shall allow for cleaning all glass, scrubbing all floors and pavings, thoroughly vacuum cleaning walls and floors of all rooms to remove all dust and dirt and leaving the premises in a clean and perfect state for immediate use and occupation at completion.				
	F: ..... V: ..... T:	Item			
	Carried Forward		R		
	Section No. 1 Bill No. 1 Preliminaries and General				

	Brought Forward		R		
69	11.8 Vermin				
	F: ..... V: ..... T:	Item			
70	11.9 Overhand work				
	F: ..... V: ..... T:	Item			
71	11.10 Tenant installations by **direct contractors**				
	F: ..... V: ..... T:	Item			
72	11.11 Advertising				
	Any other form of advertising on the site and the hoarding by the **Contractor** and / or any **subcontractor** is not permitted				
	F: ..... V: ..... T:	Item			
	12.0 PRELIMINARIES SCHEDULE (OF VARIABLES)				
	Information necessary for elections and completion of those clauses contained in the schedule which are necessary for tender purposes is given hereunder.				
	Where no information is given it shall mean that no specific requirements are expected.				
	12.1 Provisional bills of quantities [2.2]				
	The quantities are provisional				
	YES				
	12.2 Availability of construction information [2.3]				
	Construction documentation is complete				
	NO				
	The budgetary allowances allocated for subsequent trades included in this document will be measured and valued in accordance with clause 26 of the Principal Building Agreement and deducted in whole or in part if not required without any compensation for loss of profit on the said allowances.				
	Carried Forward		R		
	Section No. 1 Bill No. 1 Preliminaries and General				

	Brought Forward		R		
	12.3 Previous work - dimensional accuracy [3.1] The contractor is liable for carrying out any / all surveys, etc in order to check the dimensional accuracy of work previously executed. 12.4 Previous work - defects [3.2] 12.5 Inspection of adjoining properties [3.3] This also applies to adjoining roads and services, etc, buildings and improvements of whatever nature on the **Employer's** property where these are adjacent to or affected by the works. Check levels and photographs as described in clause 3.3 are required. The **Contractor** will be held responsible for maintaining the above in it's present condition during execution of the works and will be liable for all costs relating to the repairing and/or replacing of damaged areas caused by the construction operations 12.6 Enclosure of the works [4.2] 12.7 Geotechnical investigation [4.3] 12.8 Existing premises occupied [4.5] 12.9 Services - known [4.6] 12.10 Water [8.1] Option C (by **Employer** - metered) 12.11 Electricity [8.2] Option C (by **Employer** - metered)				
	Carried Forward		R		
	Section No. 1 Bill No. 1 Preliminaries and General				

	Brought Forward		R		
	12.12 Ablution and welfare facilities [8.3]				
	12.13 Communication facilities [8.4] (by **Contractor**) Telephone - YES Facsimile - YES Email - YES				
	12.14 Protection of the works [11.1] The **Contractor** shall be responsible for any damage, which may occur and shall make good at his own expense				
	12.15 Protection/isolation of existing/sectionally occupied works [11.2] Protection is required YES				
	Carried Forward		R		
	Section No. 1 Bill No. 1 Preliminaries and General				

	Brought Forward		R		
	12.16 Disturbance [11.5] The surrounding buildings will be occupied and functioning during these works and the **Contractor** is to ensure that the works are carried out with as little mess and noise as possible and with a minimum of disturbance to adjoining and close buildings and properties and their occupants. The **Contractor** is to make use of appropriate plant and methods of execution which result in the least possible noise factors. All machinery shall be fully muffled. The **Contractor** shall liaise with the **Principal Agent** in order to ensure that all reasonable measures are taken to control noise, dust and vibration that may detrimentally affect activities and equipment. The **Contractor** shall ensure that the functioning of the surrounding premises is not disturbed or disrupted, except where special arrangements are made with the **Principal Agent**. The **Contractor** may not carry out construction operations outside of normal working times without the permission of the **Principal Agent.** The above requirements are to be strictly adhered to since the surrounding areas are occupied with animals and visitors periods during the contract period 12.17 Environmental disturbance [11.6] No plant, tree, bush, etc. will be disturbed during construction unless instructed by the Principal Agent. The **Contractor** shall keep the site, structures, etc well watered during operations to prevent dust and shall provide and erect and remove on completion of the **works** all necessary temporary dust screens all to the satisfaction of the **Principal Agent** The **Contractor** shall be responsible for and take all precautions in controlling all forms of pollution during the contract period due to noise, artificial light, wind-blown sand, dust, etc in the dry season and deposits of mud etc in the wet season by whatever means necessary, including daily removal of deposits, etc all to the satisfaction of the **Principal Agent** and any costs, claims, etc will be for the **Contractor's** account				
	Carried Forward		R		
	Section No. 1 Bill No. 1 Preliminaries and General				

	Brought Forward		R		
	- -				
	CONTRACT DATA				
	A TENDER INFORMATION				
	The Tenderer is referred this tender document for the Contract Data provided by the Employer				
	- -				
	Carried Forward to Summary of Section No. 1		R		
	Section No. 1 Bill No. 1 Preliminaries and General				

Item No		Quantity	Rate	Amount	
	SECTION 1				
	BILL NO. 2				
	HEALTH AND SAFETY SPECIFICATION				
	- -				
	GENERAL				
	The requirements of the **Construction Regulation 5 (1) (b)** of the **Occupational Health and Safety Act, No. 85 of 1993** shall be the applicable to this contract and deemed to be incorporated in these bills of quantities				
	These clauses are hereinafter referred to by clause number and heading only. Where standard clauses or alternatives are not entirely applicable to this contract such modifications, corrections or supplements as will apply are given under each relevant clause heading and such modifications, corrections or supplements shall take precedence notwithstanding anything contrary contained in the abovementioned documents				
	Where any item is not relevant to this specific contract such item is marked N/A, signifying "not applicable"				
	PRICING				
	Should the Contractor select *Option A in terms of* ***Clause 26, Payment of Preliminaries*** in the *Contract Data* for the purpose of payment and adjustment of these preliminaries, the amount entered into the amount column in the items in this bills of quantities is to be divided into one or more of the following three categories provided, namely:				
	- Fixed (F) **- Value Related (V)** **- And Time Related (T)**				
	- -				
	CLIENT HEALTH AND SAFETY SPECIFICATION				
1	Section 1: Background				
	F: ..... V: ..... T:	Item			
	Carried Forward		R		
	Section No. 1 Bill No. 2 Health and Safety Specification				

	Brought Forward		R		
2	Section 2: Scope F: ..... V: ..... T:	Item			
3	**Section 3: OH&S Management** F: ..... V: ..... T:	Item			
4	Section 4: Project / Site Specific Requirements F: ..... V: ..... T:	Item			
5	Section 5: Administrative & Legal Requirements F: ..... V: ..... T:	Item			
6	Section 6: Education & Training F: ..... V: ..... T:	Item			
7	Section 7: Public Safety, Security & Measures & Emergency Preparedness F: ..... V: ..... T:	Item			
8	Section 8: Personal Protective Equipment F: ..... V: ..... T:	Item			
9	Section 9: Housekeeping F: ..... V: ..... T:	Item			
10	Section 10: Working at Heights (Including Roof work) F: ..... V: ..... T:	Item			
	Carried Forward Section No. 1 Bill No. 2 Health and Safety Specification		R		

	Brought Forward		R		
11	Section 11: Scaffolding F: ..... V: ..... T:	Item			
12	Section 12: Ladders F: ..... V: ..... T:	Item			
13	Section 13: Electricity F: ..... V: ..... T:	Item			
14	Section 14: Emergency / Fire Prevention and Protection F: ..... V: ..... T:	Item			
15	Section 15: Tools F: ..... V: ..... T:	Item			
16	Section 16: Cranes/lifting equipment F: ..... V: ..... T:	Item			
17	Section 17: Transport & Materials Handling Equipment F: ..... V: ..... T:	Item			
18	Section 18: Site Plant and Machinery F: ..... V: ..... T:	Item			
	Carried Forward Section No. 1 Bill No. 2 Health and Safety Specification		R		

	Brought Forward		R		
19	Section 19: Plant & Storage Yards / Site Workshops Specifics F: ..... V: ..... T:	Item			
20	Section 20: Workplace Environment, Health and Hygiene F: ..... V: ..... T:	Item			
	<u>COVID 19 SPECIFICATION</u>				
21	Section 1: Background F: ..... V: ..... T:	Item			
22	Section 2: Scope F: ..... V: ..... T:	Item			
23	Section 3: Work stoppage F: ..... V: ..... T:	Item			
24	Section 4: Administrative & Legal Requirements F: ..... V: ..... T:	Item			
25	Section 5: Education & Training F: ..... V: ..... T:	Item			
	Carried Forward		R		
	Section No. 1 Bill No. 2 Health and Safety Specification				

	Brought Forward		R		
26	Section 6: Public Safety, Security & Measures & Emergency Preparedness F: ..... V: ..... T:	Item			
27	Section 7: Personal Protective Equipment F: ..... V: ..... T:	Item			
28	Section 8: Housekeeping F: ..... V: ..... T:	Item			
29	Section 9: Working at Heights (Including Roof work) F: ..... V: ..... T:	Item			
30	Section 10: Cleaning and disinfecting F: ..... V: ..... T:	Item			
31	Section 11: Procedure to be followed in the event of a possible COVID-19 infection F: ..... V: ..... T:	Item			
32	Section 12: Emergency / Fire Prevention and Protection F: ..... V: ..... T:	Item			
33	Section 13: Tools & portable electric equipment F: ..... V: ..... T:	Item			
	Carried Forward		R		
	Section No. 1 Bill No. 2 Health and Safety Specification				

	Brought Forward		R		
34	Section 14: Risk Assessment F: ..... V: ..... T:	Item			
35	Section 15: Workplace Environment, Health and Hygiene F: ..... V: ..... T:	Item			
	Carried Forward to Summary of Section No. 1		R		
	Section No. 1 Bill No. 2 Health and Safety Specification				

SECTION SUMMARY - SECTION 1 - PRELIMINARIES

Bill No		Page No		Amount
1	Preliminaries and General	113		
2	Health and Safety Specification	119		
	Carried to Final Summary		R	
	Section No. 1			

Item No		Quantity	Rate	Amount
	SECTION 2 **BILL NO. 1** **ALTERATIONS** - **PREAMBLES** For preambles refer to "Model Preambles for Trades" **SUPPLEMENTARY PREAMBLES** The following "Supplementary Preambles" are incorporated in this bill to satisfy the requirements of the project and shall take precedence over the provisions of the said General Preambles **View site:** Before submitting his tender, the Contractor shall visit the site and satisfy himself as to the nature and extent of the work to be done and the value of the materials contained in the buildings or portions of the buildings to be demolished. No claim for any variations of the contract sum in respect of the nature and extent of the work or of inferior or damaged materials will be entertained			
	Carried Forward		R	
	Section No. 2 Bill No. 1 Alterations			

	Brought Forward		R		
	Demolitions and Works on Site All demolitions and works on site must be carried out carefully and in the safest possible manner and the Contractor is to make a thorough examination and take all necessary precautions before proceeding with the work. The utmost care is to be observed to avoid any structural or other damage in the remaining portions of the existing building Special care is to be exercised not to interfere with any electrical installation, and notice is to be given to the Representative/Agent when any disconnections, removal of wires, etc. necessary and the Contractor is to afford every facility to the workmen carrying out his work The Contractor shall not remove or interfere with any furniture, fittings or similar articles unless specially mentioned in the following items and shall give adequate notice to the Representative/Agent of the removal of any articles from parts of the building are to be altered becomes necessary so that the Employer may have same removed before the Contractor commences work in such parts The Contractor will be held solely responsible for any damage to persons and property and for the safety of the structures and must make good at his expense any damage that may occur **Old materials to become property of the contractor** Old materials from alterations except where described to be re-used or handed over, become the property of the contractor **Old materials to be carted away** Old materials from alterations except where described as re-used or handed over, as well as all rubbish, etc. must be regularly carted from the site and not be allowed to accumulate on or around the site. **Old materials to be re-used** None of the old materials are to be used for new work except where specifically described as being set aside for re-use.				
	Carried Forward		R		
	Section No. 2 Bill No. 1 Alterations				

	Brought Forward		R		
	Handing over of materials Where certain materials or articles from demolitions or alterations are described as to be handed over by the contractor to the Department's Representative or Representative/Agent such materials or articles shall be properly stored by the contractor until handing over thereof. The contractor must obtain an official receipt listing the materials or articles and dates of handover. If the contractor fails to submit the receipt when requested to do so it shall be deemed that the materials or articles are still in his possession and he will be held liable to the Department for the full replacement value thereof which amount will be deducted from any monies due to the contractor.				
	General The contractor shall carry out the whole works with as little mess and noise as possible and with a minimum of disturbance to the occupants of the building. The contractor shall provide proper protection and provide, erect and remove when directed, any temporary tarpaulins that may be necessary during the progress of the works, all to the satisfaction of the Project Manager Water supply pipes and other piping that may be encountered and found necessary to disconnect or cut, shall be effectually stopped off or grubbed up and removed, and any new connections that may be necessary shall be made with proper fittings, to the satisfaction of the principal agent Doors, fanlights, fittings, frames, linings, etc. which are to be re-used shall be thoroughly overhauled before refixing including taking off, easing and rehanging, cramping up, re-wedging as required and making good cramps, dowels, etc, and easing, oiling, adjusting and repairing ironmongery as necessary, replacing any glass damaged in removal or subsequently and stopping up all nail and screw holes with tinted plastic wood to match timber, unless otherwise described. Re-painting or re-varnishing is given separately				
	Carried Forward		R		
	Section No. 2 Bill No. 1 Alterations				

	Brought Forward		R		
	Prices for taking out of doors, windows, etc. shall include for removal of all beads, architraves, ironmongery, etc. Prices for taking out and removing doors and frames shall include for removing door stops, cabin hooks, etc. and making good floor and wall finishes to match existing With regard to building up of openings in existing walls, cement screeds and pavings, granolithic, tops of walls, etc, shall be levelled and prepared for raising of brickwork Making good of finishes shall include making good of the brick and concrete surfaces onto which the new finishes are applied, where necessary The contractor will be required to take all dimensions affecting the existing buildings on the site and he will be held solely responsible for the accuracy of all such dimensions where used in the manufacture of new items (doors, windows, fittings, etc.) **<u>Hazardous materials:</u>** Demolitions of buildings, services, external works, site services, etc are to include for the safe removal and disposal of <u>asbestos or asbestos products or other hazardous materials</u> **by approved Registered Specialists** -				
	Carried Forward		R		
	Section No. 2 Bill No. 1 Alterations				

	Brought Forward			R		
	REMOVAL OF EXISTING WORK					
	Breaking down and removing unreinforced concrete:					
1	150mm Concrete surface bed	m2	3			
	Breaking up and removing reinforced concrete, including cutting off and removing reinforcement:					
2	150mm Thick slabs	m2	3			
	Taking up and removing paving, etc:					
3	Brick paving	m2	603			
	Taking out and removing doors, windows, etc. including thresholds, cills, etc:					
4	Timber single door and frame not exceeding 2,5m²	No	30			
	Carefully taking out roof coverings:					
5	Thatch roofing from existing roof structure	m2	266			
	Taking down and removing roofs, floors, panelling, ceilings, partitions, etc:					
6	Carefully take out timber gumpole panels and set aside for later re-use	m2	90			
	Taking out and removing glass and mirrors:					
7	Glass from steel windows including cleaning out rebates and preparing for new glass	m2	3			
	Taking out and removing balustrades, handrails etc:					
8	Steel circular section handrails approximately 50mm in diameter and steel supports 150mm high bolted to brickwork	m	10			
	Taking down and removing:					
9	Diamond mesh fencing to tops and sides of steel structures	m2	3,821			
10	Diamond mesh fence and posts 2 800mm high	m	993			
	Carried Forward			R		
	Section No. 2 Bill No. 1 Alterations					

	Brought Forward			R		
11	Steel balustrade approximately 900mm high	m	100			
12	Timber picket fence approximately 900mm high	m	31			
13	110mm Diameter steel posts 3,2m high including removal of existing footing and carting away	No	10			
14	Ditto, but 80mm diameter posts	No	20			
15	50 x 50mm SHS Framed mesh panel 1420 x 1050mm high overall with sides bolted to timber gumpoles	No	1			
16	Ditto, but 1470 x 1000mm high overall	No	1			
17	Ditto, but 1480 x 1250mm high overall	No	1			
18	Ditto, but 1540 x 1310mm high overall	No	1			
19	Ditto, but 1560 x 1180mm high overall	No	1			
	GENERAL REPAIR WORK					
	Attend to, service and repair as necessary all steel doors and gates including replacing any defective or missing parts:					
20	Steel gate size 900 x 2 100mm high overall including hinges and pad latch and ensure that gate is properly aligned to open and close correctly (paintwork elsewhere measured)	No	2			
21	Feeding hatch pulley system size 500 x 1 300mm high	No	12			
	Carried Forward to Summary of Section No. 2			R		
	Section No. 2 Bill No. 1 Alterations					

Item No		Unit	Quantity	Rate	Amount	
	SECTION 2 **BILL NO. 2** **EARTHWORKS** - **PREAMBLES** For preambles refer to "Model Preambles for Trades" **SUPPLEMENTARY PREAMBLES** The following "Supplementary Preambles" are incorporated in this bill to satisfy the requirements of the project and shall take precedence over the provisions of the said General Preambles **Nature of ground** The nature of the ground is assumed to be loose sandy material, therefore "earth", but possibly interspersed with "soft rock" or "hard rock" Should the Contractor encounter any "soft" or "hard" rock in the excavations, he shall immediately notify the Principal Agent who shall be the sole arbiter as to what constitutes "soft" or "hard" rock for final account purposes **Subterranean water:** No subterranean water is expected Should the Contractor however, encounter any subterranean water on the site, he shall immediately notify the Principal Agent thereof and submit recommendations for keeping the works free from subterranean water together with all costs involved therewith					
	Carried Forward			R		
	Section No. 2 Bill No. 2 Earthworks					

	Brought Forward			R		
	<u>Carting away of excavated material</u> Descriptions of carting away of excavated material shall be deemed to include loading excavated material onto trucks directly from the excavations or, alternatively, from stock piles situated on the building site **<u>Filling:</u>** Notwithstanding the reference to prescribed multiple handling in clause 1 of the Standard System of Measuring Building Work, prices for filling and backfilling shall include for all selection and any necessary multiple handling of material -					
	Carried Forward			R		
	Section No. 2 Bill No. 2 Earthworks					

	Brought Forward			R		
	SITE CLEARANCE, ETC.					
	Site clearance					
1	Digging up and removing rubbish, debris, vegetation, hedges, shrubs and trees not exceeding 200mm girth, bush, etc.	m2	814			
2	Stripping average 150mm thick layer of top soil and stockpiling on site	m2	594			
	REMOVAL OF TREES, ETC					
	Taking out and removing, grubbing up roots and filling in holes:					
3	Tree exceeding 200mm and not exceeding 500mm girth	No	12			
4	Tree exceeding 500mm and not exceeding 1000mm girth	No	6			
	Cutting down and removing:					
5	Carefully cutting tree branches approximately 300mm girth and remove off site	No	8			
	EXCAVATION, FILLING, ETC.					
	Excavation in earth not exceeding 2m deep:					
6	Trenches	m3	464			
7	Holes	m3	143			
	Extra over trench and hole excavations in earth for excavation in:					
8	Soft rock	m3	35			
9	Hard rock	m3	5			
	Extra over trench and hole excavations in earth for breaking up and removing:					
10	Brickwork	m3	98			
11	Unreinforced concrete	m3	40			
12	Reinforced concrete	m3	40			
	Carried Forward			R		
	Section No. 2 Bill No. 2 Earthworks					

	Brought Forward			R		
	Extra over all excavations for carting away:					
13	Surplus material from excavations and/or stock piles on site to a dumping site to be located by the contractor	m3	245			
	Risk of collapse of excavations:					
14	Sides of trench and hole excavations not exceeding 1,5m deep	m2	1,904			
	Keeping excavations free of water:					
15	Keeping excavations free of all water other than subterranean water		Item			
	Earth filling obtained from the excavations and/or prescribed stock piles on site (not compacted):					
16	Backfilling to trenches, holes, etc.	m3	265			
	Compaction of surfaces:					
17	Compaction of ground surface under floors etc. by wetting and compacting with a vibratory roller	m2	741			
	Carried Forward to Summary of Section No. 2			R		
	Section No. 2 Bill No. 2 Earthworks					

Item No		Unit	Quantity	Rate	Amount	
	SECTION 2 **BILL NO. 3** **CONCRETE, FORMWORK AND REINFORCEMENT** - **PREAMBLES** For preambles refer to "Model Preambles for Trades" **SUPPLEMENTARY PREAMBLES** The following "Supplementary Preambles" are incorporated in this bill to satisfy the requirements of the project and shall take precedence over the provisions of the said General Preambles **Cost of tests** The costs of making, storing and testing of concrete test cubes as required under clause 7 "Tests" of SABS 1200 G shall include the cost of providing cube moulds necessary for the purpose, for testing costs and for submitting reports on the tests to the architect. The testing shall be undertaken by an independent firm or institution nominated by the contractor to the approval of the architect. **Formwork** Description of formwork shall be deemed to include use and waste only (except where described as "left in" or "permanent"), for fitting together in the required forms, wedging, plumbing and fixing to true angles and surfaces as necessary to ensure easy release during stripping and for reconditioning as necessary before re-use The vertical strutting shall be carried down to such construction as is sufficiently strong to afford the required support without damage and shall remain in position until the newly constructed work is able to support itself					
	Carried Forward			R		
	Section No. 2 Bill No. 3 Concrete, Formwork and Reinforcement					

	Brought Forward			R		
	Formwork to soffits of solid etc. shall be deemed to be slabs not exceeding 250mm thick unless otherwise described Formwork to sides of bases, pile caps, ground beams, etc. will only be measured where it is prescribed by the engineer for design reasons. Formwork necessitated by irregularity or collapse of excavated faces will not be measured and the cost thereof shall be deemed to be included in the allowance for taking the risk of collapse of the sides of the excavations, provision for which is made in "Earthworks" -					
	Carried Forward			R		
	Section No. 2 Bill No. 3 Concrete, Formwork and Reinforcement					

	Brought Forward			R		
	UNREINFORCED CONCRETE					
	25MPa/19mm concrete:					
1	Filling 200 x 100 x 450mm high hollow slots in wall with concrete including 100 x 450mm high formwork on two sides and smooth trowelled surfaces	No	33			
2	Filling 200 x 100 x 700mm high hollow slots in wall with concrete including 100 x 700mm high formwork on two sides and smooth trowelled surfaces	No	5			
	UNREINFORCED CONCRETE CAST AGAINST EXCAVATED SURFACES					
	15MPa/19mm concrete:					
3	Surface blinding under footings and bases	m3	136			
	25MPa/19mm concrete:					
4	Strip footings	m3	142			
	REINFORCED CONCRETE CAST AGAINST EXCAVATED SURFACES					
	25MPa/19mm concrete:					
5	Bases	m3	55			
6	Foundation beams	m3	7			
	TEST CUBES					
7	Making and testing sets of three 150 x 150 x 150mm concrete strength test cubes (Provisional)	Sets	68			
	REINFORCEMENT					
	Steel reinforcement to structural concrete work:					
8	High tensile steel reinforcement to structural concrete work	kg	58			
	Carried Forward to Summary of Section No. 2			R		
	Section No. 2 Bill No. 3 Concrete, Formwork and Reinforcement					

Item No		Unit	Quantity	Rate	Amount	
	SECTION 2 **BILL NO. 4** **MASONRY** - **PREAMBLES** The General Preambles for Trades (2017 edition) as published by the Association of South African Quantity Surveyors shall be deemed to be incorporated in these bills of quantities and no claims arising from brevity of description of items fully described in the said General Preambles will be entertained **SUPPLEMENTARY PREAMBLES** The following "Supplementary Preambles" are incorporated in this bill to satisfy the requirements of the project and shall take precedence over the provisions of the said General Preambles **BRICKWORK** **Sizes in descriptions** Where sizes in descriptions are given in brick units, "one brick" shall represent the length and "half brick" the width of a brick **Hollow walls etc.** Descriptions of hollow walls shall be deemed to include leaving every fifth perpend of the bottom course of the external skin open as a weep hole Walls in two skins described as "bagged and sealed" shall be deemed to include having the outer face of the inner skin bagged with 1:6 cement and sand mixture and sealed with two coats "Brixeal" bitumen emulsion waterproofing coating					
	Carried Forward			R		
	Section No. 2 Bill No. 4 Masonry					

	Brought Forward			R		
	Face bricks Bricks shall be ordered timeously to obtain uniformity in size and colour **Pointing** Descriptions of recessed pointing to fair face brickwork and face brickwork shall be deemed to include square recessed, hollow recessed, weathered pointing, etc **SAMPLES** Samples of all masonry building units, except those for walls described as "load bearing", shall consist of a minimum of 6 units. Samples of building units to be used in walls described as "load bearing" shall consist of 30 units from every 30 000 units delivered to site -					
	Carried Forward			R		
	Section No. 2 Bill No. 4 Masonry					

	Brought Forward			R		
	FOUNDATIONS					
	Brickwork of NFX bricks (14 MPa nominal compressive strength) in class II mortar:					
1	One brick walls	m2	363			
2	280mm Hollow walls of two half brick skins including wire ties and filling 60mm cavity solid with 15MPa/19mm stone unreinforced concrete	m2	702			
	SUPERSTRUCTURE					
	Brickwork of NFP bricks in class II mortar:					
3	One brick walls	m2	624			
4	280mm Hollow walls of two half brick skins including wire ties	m2	85			
	FACE BRICKWORK					
	External face bricks (Allow a Prime Cost Amount of R6000/1000 bricks delivered to site) built in horizontal stretcher bond with recessed horizontal and vertical joints:					
5	**Extra over brickwork for face brickwork**	m2	648			
	BRICKWORK SUNDRIES					
6	Cutting toothings and bonding new brickwork to existing	m2	6			
7	Closing 60mm cavity of hollow wall horizontally with one course of brickwork	m	21			
	Brickwork reinforcement:					
8	150mm Wide reinforcement built in horizontally	m	768			
	Galvanised hoop iron cramps, ties, etc:					
9	30 x 1,6mm Cramp 500mm long with one end fixed to rafter and other end built into timber beam	No	16			
	Carried Forward to Summary of Section No. 2			R		
	Section No. 2 Bill No. 4 Masonry					

Item No		Quantity	Rate	Amount	
	SECTION 2				
	BILL NO. 5				
	WATERPROOFING				
	- -				
	PREAMBLES				
	For preambles refer to "Model Preambles for Trades"				
	SUPPLEMENTARY PREAMBLES				
	The following "Supplementary Preambles" are incorporated in this bill to satisfy the requirements of the project and shall take precedence over the provisions of the said General Preambles				
	Installation by Approved Waterproofing Contractor				
	Waterproofing to roofs, basements, parking decks, etc. Must be installed by Manufacturer approved contractors.				
	Preparation of Substrates & Surfaces				
	Substrates and surfaces must be smooth, clean, free of contaminants and dry				
	Substrates and surfaces must be prepared in accordance with manufacturer's instructions				
	The contractor is to allow for the cost of substrate preparation in the rates for Waterproofing items				
	Waterproofing				
	Waterproofing of roofs, basements, etc. shall be laid under a ten year guarantee. Waterproofing to roofs shall be laid to even falls to outlets etc with necessary ridges, hips and valleys. Descriptions of sheet or membrane waterproofing shall be deemed to include additional labour to turn-ups and turn-downs				
	Carried Forward		R		
	Section No. 2 Bill No. 5 Waterproofing				

	Brought Forward		R		
	The method of application to be discussed with and approved by the Project Manager before implementation -				
	Carried Forward		R		
	Section No. 2 Bill No. 5 Waterproofing				

	Brought Forward			R		
	WATERPROOFING BASEMENTS, ROOFS, BALCONIES, ETC.					
	Prime surface with bitumen primer and apply one layer "Derbigum SP4" or similar approved waterproofing membrane with 75mm side laps and 100mm end laps, sealed to primed surface to falls and cross falls by "torch fusion" laid in accordance with manufacturer's instructions:					
1	On flat roofs	m2	151			
	PROTECTIVE ROOFING PAINT					
	Two coats "Silvakote" or similar approved bituminous aluminium paint:					
2	On waterproofing to roofs	m2	151			
	SEALING STRIPS, JOINT SEALANTS, ETC.					
	Silicone sealing compound including backing cord, bond breaker, primer, etc:					
3	Sealing around steel/aluminium windows	m	40			
	Carried Forward to Summary of Section No. 2			R		
	Section No. 2 Bill No. 5 Waterproofing					

Item No		Quantity	Rate	Amount	
	SECTION 2 **BILL NO. 6** **ROOF COVERINGS** - **PREAMBLES** For preambles refer to "Model Preambles for Trades" **SUPPLEMENTARY PREAMBLES** The following "Supplementary Preambles" are incorporated in this bill to satisfy the requirements of the project and shall take precedence over the provisions of the said General Preambles Profiled metal roof sheeting and accessories shall be supplied with a 20 year guarantee and be installed by an approved installer All fixing holes shall be drilled and not punched Roof covering accessories shall be manufactured from the same material as used for roof covering -				
	Carried Forward		R		
	Section No. 2 Bill No. 6 Roof Coverings, Etc.				

	Brought Forward			R		
	ROOF TILES					
	1675 x 395mm "Harvey Thatch" or similar approved thatch roof tile in approved colour, fixed in accordance with manufacturer's instructions to and including 50 x 38mm sawn softwood battens at minimum 350mm centres between battens, battens fixed to existing gumpole rafters at 1100mm centres:					
1	Roof covering with pitch exceeding 25 degrees	m2	266			
2	Ridge capping tiles to match roof colour	m	140			
3	Angle hip capping	m	70			
4	Valley flashing	m	70			
	POLYCARBONATE SHEETING AND ACCESSORIES					
	2mm Thick polycarbonate sheeting and accessories fixed to steel structure or rails at 600mm centres:					
5	Clad vertically to steel structure	m2	589			
	UNDERLAY TO TILED ROOFS					
	Polypropylene underlay with 150mm overlapped joints, fixed over trusses and under tiling battens with and including galvanised clout nails:					
6	To roofs with pitch exceeding 25 degrees	m2	266			
	SHADE NETTING, ETC					
	Bird proofing:					
7	Install shade netting minimum 85gsm to tops of mesh structures	m2	4,508			
8	Install 20% high-density polyethylene shade netting	m2	694			
9	Install 20 x 20mm 'hockey goal' netting over structure	m2	3,990			
	Carried Forward to Summary of Section No. 2			R		
	Section No. 2 Bill No. 6 Roof Coverings, Etc.					

Item No		Quantity	Rate	Amount	
	SECTION 2 **BILL NO. 7** **CARPENTRY AND JOINERY** - **PREAMBLES** For preambles refer to "Model Preambles for Trades" **SUPPLEMENTARY PREAMBLES** The following "Supplementary Preambles" are incorporated in this bill to satisfy the requirements of the project and shall take precedence over the provisions of the said General Preambles **PREFABRICATED ROOF TRUSSES, ETC.** Items described as nailed shall be deemed to be fixed with hardened steel nails or shot pins to brickwork or concrete. All exposed timber to be treated with preservative to combat fungus as prescribed by the Forestry Act 1968 (Act 72 of 1968). **Particle board:** Particle board shall comply with the following specifications: a) SABS 1300 Particle board: exterior and flooring type b) SABS 1301 Particle board: interior type. **Joinery** Descriptions of frames shall be deemed to include frames, transomes, mullions, rails, etc. Unless otherwise specified all exposed timber to be planed and sanded smooth and to be in selected hardwood meranti, internal timber ceilings can be SA Pine.				
	Carried Forward		R		
	Section No. 2 Bill No. 7 Carpentry and Joinery				

	Brought Forward		R		
	Fixing: Items described as nailed shall be deemed to be fixed with hardened steel nails or shot pins to brickwork or concrete. Descriptions of hardwood joinery shall be deemed to include pelleting of bolt holes. All sections of timber to be built into brickwork or concrete to be wrapped in Gunplas and the cost is deemed to be included in the relevant item. **Sealants, etc.** Tenders should include silicone sealant between skirting and finished surfaces of walls and floors in their price -				
	Carried Forward		R		
	Section No. 2 Bill No. 7 Carpentry and Joinery				

	Brought Forward			R	
	ROOFS, ETC.				
	ROOF CONSTRUCTION				
	Sawn softwood grade 5:				
1	38 x 114mm Rafters in lengths not exceeding 2,4m	m	250		
2	Ditto, but exceeding 2,4m and not exceeding 3,9m	m	546		
3	38 x 114mm Tie beam in lengths not exceeding 2,4m	m	250		
4	50 x 25mm Battens	m	933		
5	Extra over 50 x 25mm battens for tilting fillet	m	140		
	Wrought laminated timber:				
6	70 x 222mm Beams, pergola beams, etc, bolted	m	140		
	DOORS				
	Wrought meranti doors suitable for painting, hung to steel frame (elsewhere):				
7	Framed, ledged and battened Z-braced single doors 760 x 1970mm high	No	20		
8	Extra over 760 x 1970mm single door for 500 x 500mm high glazed viewing hatch including 6,38mm safety glass pane with timber frame	No	20		
	PANELS, ETC				
	Take from store and refit in similar new position to fencing				
9	40mm Diameter timber gumpole cladding panels	m2	90		
	Carried Forward to Summary of Section No. 2			R	
	Section No. 2 Bill No. 7 Carpentry and Joinery				

Item No		Quantity	Rate	Amount	
	SECTION 2 **BILL NO. 8** **IRONMONGERY** - **PREAMBLES** For preambles refer to "Model Preambles for Trades" **SUPPLEMENTARY PREAMBLES** The following "Supplementary Preambles" are incorporated in this bill to satisfy the requirements of the project and shall take precedence over the provisions of the said General Preambles **Locks:** Notwithstanding Clause 2, Item 3 of the "Ironmongery" trade of the "Standard System of Measuring Building Work, Seventh Edition", descriptions of locks shall be deemed to include two keys per lock **Finishes to ironmongery:** Where applicable, finishes to ironmongery are indicated by suffixes in accordance with the following list: BS Satin bronze lacquered CH Chromium plated SC Satin chromium plated SE Silver enamelled GE Grey enamelled AN Anodised natural AS Anodised silver AB Anodised bronze AG Anodised gold ABL Anodised black PB Polished brass PL Polished and lacquered PT Epoxy coated SD Sanded BBS Brushed stainless steel -				
	Carried Forward		R		
	Section No. 2 Bill No. 8 Ironmongery				

	Brought Forward		R		
	Carried Forward		R		
	Section No. 2 Bill No. 8 Ironmongery				

	Brought Forward			R		
	LOCKS, HANDLES, HINGES, ETC.					
	'Union' or similar approved locks:					
1	Natal 3 Lever Lockset including chrome plated handles complete (code CZ66824312)	No	20			
	'Union' or similar approved hinges:					
2	100mm Brass hinge	No	60			
	LETTERS, NAMEPLATES, ETC.					
3	Tripping Hazard Safety Sign (code WW33E)	No	1			
	Carried Forward to Summary of Section No. 2			R		
	Section No. 2 Bill No. 8 Ironmongery					

Item No		Unit	Quantity	Rate	Amount	
	SECTION 2 **BILL NO. 9** **STRUCTURAL STEELWORK** - **PREAMBLES** For preambles refer to "Model Preambles for Trades" **SUPPLEMENTARY PREAMBLES** The following "Supplementary Preambles" are incorporated in this bill to satisfy the requirements of the project and shall take precedence over the provisions of the said General Preambles **Specification:** All structural steel must comply with SANS 1200H (Degree of Accuracy II) All hot rolled structural steel sections must comply with SANS 1431 grade 300W, unless otherwise specified on the drawings Unless otherwise designated, all bolts and nuts will be grade 4.6 to SANS 135 and BS 916. Descriptions of bolts shall be deemed to include nuts and washers. Descriptions of L-shaped and U-shaped anchor bolts shall be deemed to include bending, threading, nuts and washers and embedding in concrete. Descriptions of expansion anchors and bolts and chemical anchors and bolts shall be deemed to include nuts, washers and mortices in brickwork or concrete All connections must be welded all round with a 6mm fillet weld, unless otherwise specified on the drawings					
	Carried Forward			R		
	Section No. 2 Bill No. 9 Structural Steelwork					

	Brought Forward			R		
	Drawings and shop details: The Contractor shall be responsible for preparing shop drawings and details which must be submitted to the Principal Agent for approval prior to commencement of fabrication. Before commencing any fabrication, the steel fabricator must check the accessibility of the site and design the sizes of individual parts accordingly **Hot-dipped galvanizing:** After fabrication and prior to delivery to site, all steelwork described as hot-dipped galvanized, is to be descaled and thoroughly cleaned by pickling, after which it is to be hot dip galvanized in accordance with the requirements of SANS 121/1501461 **Descriptions** Descriptions of bolts shall be deemed to include nuts and washers Descriptions of L-shaped and U-shaped anchor bolts shall be deemed to include bending, threading, nuts and washers and embedding in concrete Descriptions of expansion anchors and bolts and chemical anchors and bolts shall be deemed to include nuts, washers and mortices in brickwork or concrete Descriptions of L-shaped and U-shaped anchor bolts shall be deemed to include bending, threading, nuts and washers and embedding in concrete. Where anchor bolts are described as embedded in sides or soffits of concrete it shall be deemed to include holes through formwork. Descriptions of expansion anchors and bolts and chemical anchors and bolts shall be deemed to include nuts, washers and mortices in brickwork or concrete. -					
	Carried Forward			R		
	Section No. 2 Bill No. 9 Structural Steelwork					

	Brought Forward			R		
	STEEL COLUMNS AND BEAMS					
	Welded columns in single lengths with flat section base, top, bearer and connection plates bolted to brickwork and/or concrete:					
1	SHS 100 x 100 x 3mm	kg	2,276			
2	CHS 48,4 x 4mm	kg	3,596			
3	CHS 60,3 x 3mm	kg	10,534			
4	CHS 110 x 4mm	kg	1,078			
5	CHS 127,2 x 3mm	kg	1,702			
6	CHS 194 x 4,5	kg	781			
7	190 x 190 x 10mm Thick base plate welded to 110mm diameter post and bedded into concrete base (elsewhere measured)	No	43			
8	300 x 300 x 12mm Thick base plate bedded on top of concrete	No	18			
9	400 x 400 x 12mm Thick base plate bedded on top of concrete	No	21			
	Welded beams in single lengths with flat section bearer and connection plates bolted to brick walls:					
10	75 x 50 x 20 x 3,0 Lipped channel section beam	kg	689			
11	100 x 50 x 4mm RHS in pergola structure	t	2.28			
	DOORS, GATES ETC.					
	Welded steel doors:					
12	50 x 50mm SHS framed door including one 50 x 50mm horizontal centre member 760 wide x 1970mm high overall, fully clad with 20 x 20 x 2,5mm thick welded wire mesh welded to outer frame and centre member, including fixed latch pad and all ironmongery fixed to existing steel frames	No	10			
	Carried Forward			R		
	Section No. 2 Bill No. 9 Structural Steelwork					

	Brought Forward			R		
13	60,3 x 3mm CHS framed gate 900 wide x 2400mm high overall including one 60,3 x 3mm horizontal centre member with one diagonal brace in top half and one diagonal brace in bottom half, all fully clad with 20 x 20 x 2,5mm thick welded wire mesh welded to outer frame and centre member and bracing, including fixed latch pad and hinges welded to outer frame (elsewhere measured) and all ironmongery	No	7			
14	127 x 3mm CHS framed gate 900 wide x 2100mm high overall including one 127 x 3mm horizontal centre member with one diagonal brace in top half and one diagonal brace in bottom half, all fully clad with 50 x 50 x 2mm thick welded wire mesh welded to outer frame and centre member and bracing, including fixed latch pad and hinges welded to outer frame (elsewhere measured) and all ironmongery	No	1			
15	Ditto, but 2400 wide x 2400mm high overall	No	1			
	Welded steel mesh screens:					
16	50 x 50 x 2mm SHS frame 1460 x 2300mm high overall with and including 25 x 25mm x 0,9mm galvanized wire mesh welded to inside of frame with frame three times bolted flush to timber gumpoles on each side and fixed to brickwork and/or concrete below	No	1			
17	Ditto, but 1510 x 2300mm high overall	No	1			
18	Ditto, but 1540 x 2300mm high overall	No	1			
19	Ditto, but 1580 x 2300mm high overall	No	1			
20	Ditto, but 1600 x 2300mm high overall	No	1			
	BOLTS, FASTENERS, ETC.					
21	M16 Chemical anchor bolts 350mm long including 70 x 70mm washers	No	204			
22	M20 Chemical anchor bolts 350mm long including 70 x 70mm washers	No	284			
	Carried Forward to Summary of Section No. 2			R		
	Section No. 2 Bill No. 9 Structural Steelwork					

Item No		Quantity	Rate	Amount	
	SECTION 2				
	BILL NO. 10				
	METALWORK				
	- -				
	PREAMBLES				
	For preambles refer to "Model Preambles for Trades"				
	SUPPLEMENTARY PREAMBLES				
	The following "Supplementary Preambles" are incorporated in this bill to satisfy the requirements of the project and shall take precedence over the provisions of the said General Preambles				
	Descriptions				
	Descriptions of bolts shall be deemed to include nuts and washers				
	Descriptions of expansion anchors and bolts and chemical anchors and bolts shall be deemed to include nuts, washers and mortices in brickwork or concrete				
	Metalwork described as "holed for bolt(s)" shall be deemed to exclude the bolts unless otherwise described				
	ALUMINIUM WINDOWS, DOORS, ETC				
	Aluminium windows, doors, etc:				
	All calculations shall be submitted to the Principal Agent for approval				
	Doors and windows shall comply with AAAMSA design criteria				
	Glazing shall comply with SAGGA regulations. Glass thicknesses shall comply with SAGGA regulations irrespective of thicknesses shown on the schedules/drawings				
	Carried Forward		R		

	Brought Forward		R		
	Doors and windows shall be supplied with protective tape and plastic which shall be removed only once surrounding trades have been completed				
	The following certificates shall be provided prior to commencement of site work:				
	1 A copy of the relevant AAAMSA Performance Test Certificate from the manufacturer/contractor supplying the architectural aluminium product				
	2 A Certificate of Conformance confirming that anodising or powder coating has been processed in accordance with SANS 999 and SANS 1796 respectively				
	3 A copy of the relevant Performance Compliance Report from the system suppliers				
	4 A copy of the relevant Safiera Energy Rating Certification				
	5 A powder guarantee of not less than 15 years issued by the powder manufacturer. The specific conditions contained in this guarantee shall form part of the powder coating process				
	6 A Certificate of Conformance confirming that glazing has been installed in accordance with SANS 10400-N, ensuring that safety glazing materials have been installed in the mandatory areas and that each individual pane of safety glazing materials has been permanently marked				
	7 A warranty from the manufacturer of the laminated safety glass and/or hermetically sealed glazing units guaranteeing the products against delamination and colour degradation for a period of not less than five years				
	All windows and door joints must be sealed to the inside with "Dow Corning" silicone during manufacturing				
	All dimensions shall be verified on site before commencing the work and a full set of shop drawings showing all relevant details shall be submitted to the Architect for his approval, prior to the manufacture of the units				
	Carried Forward		R		
	Section No. 2 Bill No. 10 Metalwork				

	Brought Forward		R		
	<u>Sizes</u> Where sizes are given these are nominal sizes **<u>Ironmongery</u>** The tenderer must allow in his pricing for supply and fixing of ALL ironmongery Heavy duty high quality fittings must be allowed for and samples will be required for approval by the Principal Agent -				
	Carried Forward		R		
	Section No. 2 Bill No. 10 Metalwork				

	Brought Forward			R		
	GALVANISED STEEL BALUSTRADES					
	Welded handrails to stairs and balcony mild steel balustrading formed with 43mm diameter x 3mm thick stanchions at 1500mm centres, 33mm diameter x 2,5mm thick top and bottom rails, filled with 15mm diameter vertical bars at 125mm centres, finished on all surfaces with an epoxy coated painted finish and erected complete in strict accordance with the manufacturers instructions					
1	Horizontal top mounted balustrading 700mm high bolted to brickwork or concrete	m	30			
2	Extra over for closed end to horizontal balustrading	No	4			
	ALUMINIUM WINDOWS, FRAMES, ETC					
	Anodised aluminium windows to approved colour complete with subframes, ironmongery, 6.38mm safety glass with one-way tint on one side, rubber gaskets to all meeting stiles, coverstrips and sealing all round on both sides with acrylic or similar approved sealant:					
3	5000 x 2000mm high overall with one 2000 x 2000mm fixed centre pane and one 1500 x 2000mm pane either side	No	10			
	STEEL MESH CAGING					
	"Qfort Service" or similar approved mesh fencing:					
	Hot dipped galvanised steel mesh including fixing to steel posts at 500mm centres (CHS posts at 3m centres):					
4	20 x 20mm Aperture x 3,15mm thick steel diamond mesh	m2	192			
5	25 x 25mm Aperture x 0,9mm thick steel diamond mesh	m2	554			
6	50 x 50mm Aperture x 2,0mm thick steel diamond mesh	m2	2,215			
7	12,7 x 50mm Aperture x 4,0mm thick steel welded mesh	m2	4			
8	25 x 50mm Aperture x 2,0mm thick steel welded mesh	m2	852			
	Carried Forward			R		
	Section No. 2 Bill No. 10 Metalwork					

	Brought Forward			R		
	Powder coated steel mesh including fixing to steel posts at 500mm centres (CHS posts at 3m centres):					
9	20 x 20mm Aperture x 2,5mm thick steel diamond mesh	m2	4,427			
10	12,7 x 50mm Aperture x 4,0mm thick steel welded mesh	m2	4			
11	25 x 50mm Aperture x 3,15mm thick steel welded mesh	m2	1,814			
	Carried Forward to Summary of Section No. 2			R		
	Section No. 2 Bill No. 10 Metalwork					

Item No		Quantity	Rate	Amount	
	SECTION 2 **BILL NO. 11** **PLASTERING** - **PREAMBLES** For preambles refer to "Model Preambles for Trades" **SUPPLEMENTARY PREAMBLES** The following "Supplementary Preambles" are incorporated in this bill to satisfy the requirements of the project and shall take precedence over the provisions of the said General Preambles **Preparation of surfaces** Surfaces shall be dry and clean, free of dust, sand, grit and flaking particles, laitance and loose matter, contaminants such as oil, grease, etc. Surfaces shall have a moisture content not exceeding 4%. All free standing water to be removed prior to application of primers or compounds. Absorbent surfaces to be thoroughly pre-soaked in fresh water. Oil, grease, animal fats, etc. to be removed with suitable 'Ivory Chemicals' product to be applied in strict accordance with the manufacturer's instructions. Once clean, surfaces to be profiled mechanically (scabbling, blasting, scarifying, chipping or grinding) or by means of acid etching, one part 'Ivory Concrete Etchant' thinned with two parts water applied at the rate of 2m²/1 litre in strict accordance with the manufacturer's instructions. Generally substrate surfaces to have good wood float, steel trowel or power floated finish conforming in evenness and level to required tolerance with minimum compressive strength of 20MPa or above 25 N/mm² compressive strength. Screeded surfaces to be minimum 30mm thick. Expansion joints in Granolithic screed finish to be approved polysulphide sealant, laid at 5m² apart in strict accordance with manufacturer's specifications.				
	Carried Forward		R		
	Section No. 2 Bill No. 11 Plastering				

	Brought Forward		R		
	- -				
	Carried Forward		R		
	Section No. 2 Bill No. 11 Plastering				

	Brought Forward			R		
	EXTERNAL PLASTER					
	Cement plaster on brickwork:					
1	On walls	m2	1,157			
2	On narrow widths	m2	35			
	Carried Forward to Summary of Section No. 2			R		
	Section No. 2 Bill No. 11 Plastering					

Item No		Quantity	Rate	Amount	
	SECTION 2 **BILL NO. 12** **GLAZING** - **PREAMBLES** For preambles refer to "Model Preambles for Trades" **SUPPLEMENTARY PREAMBLES** The following "Supplementary Preambles" are incorporated in this bill to satisfy the requirements of the project and shall take precedence over the provisions of the said General Preambles **Float glass** The term "float glass" is used for monolithic annealed glass **Laminated glass** Laminated glass to have polyvinyl butyral (PVB) interlayer(s) -				
	Carried Forward		R		
	Section No. 2 Bill No. 12 Glazing				

	Brought Forward			R	
	GLAZING TO STEEL WITH SCREWED-ON BEADS (BEADS ELSEWHERE)				
	6,38mm one way viewing toughened safety glass:				
1	Panes exceeding 0,5m2 and not exceeding 2m2	m2	3		
	Carried Forward to Summary of Section No. 2			R	
	Section No. 2 Bill No. 12 Glazing				

Item No		Quantity	Rate	Amount	
	SECTION 2 **BILL NO. 13** **PAINTWORK** - **PREAMBLES** For preambles refer to "Model Preambles for Trades" **SUPPLEMENTARY PREAMBLES** The following "Supplementary Preambles" are incorporated in this bill to satisfy the requirements of the project and shall take precedence over the provisions of the said General Preambles **PREPARATORY WORK TO EXISTING WORK** **Previously painted plastered surfaces:** Surfaces shall be thoroughly washed down and allowed to dry completely before any paint is applied. Blistered or peeling paint shall be completely removed and minor cracks shall be opened, filled with a suitable filler and finished smooth **Previously painted metal surfaces:** Surfaces shall be thoroughly rubbed and cleaned down. Blistered or peeling paint shall be completely removed down to bare metal **Previously painted wood surfaces:** Surfaces shall be thoroughly cleaned down. Blistered or peeling paint shall be completely removed and cracks and crevices shall be primed, filled with suitable filler and finished smooth **PAINT SPECIFICATIONS** **All paint to be SABS Approved paint applied in accordance with manufacturer's instructions:**				
	Carried Forward		R		
	Section No. 2 Bill No. 13 Paintwork				

	Brought Forward		R		
	COLOURS When staining timber, the resultant colour or shade must be to the complete satisfaction of the Principal Agent before any overcoating or preservative is applied Paintwork is classified in the following different colour groups: "White", "Pastel", "Deep" and "Transparent" in accordance with the "Natural Colour System" (NCS) adopted by the SA National Standards Unless otherwise described, all paintwork shall be deemed to be classified in the "White" colour group -				
	Carried Forward		R		
	Section No. 2 Bill No. 13 Paintwork				

	Brought Forward			R	
	PAINTWORK, ETC. TO NEW WORK				
	ON FLOATED PLASTER				
	Prepare surfaces and remove all loose material, apply one coat alkali resistant plaster primer and two coats acrylic emulsion paint:				
1	On external walls	m2	1,157		
	ON METAL				
	Wash down thoroughly with degreaser and rinse with water removing all traces of degreaser. Allow to dry and prime with one coat primer and two coats polyurethane enamel paint on steel:				
2	On rails, bars, pipes, etc not exceeding 300mm girth	m	4,572		
	Carried Forward			R	
	Section No. 2 Bill No. 13 Paintwork				

	Brought Forward			R		
	PAINTWORK, ETC. TO PREVIOUSLY PAINTED SURFACES					
	ON BAGGED BRICKWORK, BLOCKWORK OR CONCRETE SURFACES					
	Two coats extremely durable UV-resistant washable pure acrylic emulsion sheen paint with teflon, on work in poor condition:					
3	On external walls	m2	78			
	ON METAL					
	Wash down thoroughly with degreaser and rinse with water removing all traces of degreaser. Allow to dry and prime with one coat primer and two coats polyurethane enamel paint on steel:					
4	On door frames	m2	33			
5	On gates, grilles, burglar screens, balustrades, etc. (both sides measured over the full flat area)	m2	8			
6	On windows	m2	18			
7	On pergolas (measured over the full flat area)	m2	218			
8	On rails, bars, pipes, etc	m2	30			
9	On rails, bars, pipes, etc. not exceeding 300mm girth	m	3,867			
	Carried Forward to Summary of Section No. 2			R		
	Section No. 2 Bill No. 13 Paintwork					

SECTION SUMMARY - SECTION 2 - BUILDING WORKS

Bill No		Page No		Amount
1	Alterations	126		
2	Earthworks	130		
3	Concrete, Formwork and Reinforcement	133		
4	Masonry	136		
5	Waterproofing	139		
6	Roof Coverings, Etc.	141		
7	Carpentry and Joinery	144		
8	Ironmongery	147		
9	Structural Steelwork	151		
10	Metalwork	156		
11	Plastering	159		
12	Glazing	161		
13	Paintwork	165		
	Carried to Final Summary		R	
	Section No. 2			

Item No		Quantity	Rate	Amount	
	SECTION 3				
	BILL NO. 1				
	SUBCONTRACT AMOUNTS				
	- -				
	PREAMBLES				
	General:				
	Subcontract amounts are net.				
	Subcontract amounts are for material and equipment supplied and installed complete by firms of specialists				
	Each subcontract amount may comprise more than one element of work. Therefore, each subcontract amount may include for work to be carried out by more than one subcontractor				
	Profit:				
	Where stated, the Contractor may allow for profit if required				
	General attendance on nominated/selected subcontractors:				
	The item "General Attendance" which follows each subcontract amount for nominated/selected subcontractors' work, shall be deemed to cover all the Contractor's costs incurred in providing free of charge to the nominated/selected subcontractors, the following:				
	1. Access to the site and places where the subcontract work is to be carried out, including the reasonable use of any temporary personnel hoists erected by the Contractor				
	2. The provision of water and lighting and of single phase electric power to a position within 50 metres of the place where the subcontract work is to be carried out but excluding water, fuel and power for commissioning of any installation				
	Carried Forward		R		
	Section No. 3 Bill No. 1 Budgetary Allowances				

	Brought Forward		R		
	3. The provision of an area for the subcontractor to establish temporary office accommodation and workshops and for the storage of plant and materials				
	4. The use of erected scaffolding belonging to the Contractor, in common with others having the like right, while it remains erected on the site				
	5. The use, at reasonable times by arrangement, of the Contractor's erected hoisting equipment				
	6. Making good in all trades and cleaning down and removal of rubbish on completion				
	Special attendance on nominated/selected subcontractors:				
	Where stated, special attendance, as set out in clause 8.1 of section B of the Preliminaries, will be described in detail in this bill				
	Builder's work:				
	Builder's work in connection with specialist services is given elsewhere in these bills of quantities				
	- -				
	Carried Forward		R		
	Section No. 3 Bill No. 1 Budgetary Allowances				

	Brought Forward		R	
	ADDITIONAL DEMOLITION AND ALTERATION WORKS			
1	Budgetary Allowance of One Hundred and Fifty Thousand Rand for additional demolition and alteration works	Item		150,000.00
	INSTALLATION OF BIOSECURITY MEASURES FOR TRUCKS			
2	Budgetary Allowance of Twenty Thousand Rand for bio-security measures for trucks	Item		20,000.00
	INSTALLATION OF FOOT BATHS TO PEDESTRIAN ACCESS POINTS			
3	Budgetary Allowance of Ten Thousand Rand for installation of foot baths to pedestrian access points	Item		10,000.00
	INSTALLATION OF MECHANICAL MECHANISM TO ENABLE AND DISABLE SHADE NETS OVER BIRD ENCLOSURES			
4	Budgetary Allowance of Twenty Five Thousand Rand for installation of mechanical mechanism to enable and disable shade nets over animal enclosures	Item		25,000.00
	REINSTATE DUCK POND AND ISLAND			
5	Budgetary Allowance of Twenty Five Thousand Rand for reinstatement of existing duck pond and island	Item		25,000.00
	LANDSCAPING TO NEW AREAS			
6	Budgetary Allowance of Five Hundred Thousand Rand for landscaping to new areas	Item		500,000.00
	REINSTATING OF CONCRETE PALISADE FENCE AT BACK OF RAPTOR			
7	Budgetary Allowance of Ten Thousand Rand for reinstating concrete palisade fence at back of raptor	Item		10,000.00
	VIEWING DECK AT CRANE CAMP			
8	Budgetary Allowance of Eighty Thousand Rand for viewing deck to be constructed at the new Crane Camp	Item		80,000.00
	Carried to Final Summary		R	
	Section No. 3 Bill No. 1 Budgetary Allowances			

Section No	FINAL SUMMARY	Page No		Amount
1	SECTION 1 - PRELIMINARIES	120		
2	SECTION 2 - BUILDING WORKS	166		
3	SECTION 3 - PROVISIONAL ALLOWANCES	169		
	SUB TOTAL		R	
	CONTRACT CONTINGENCIES			
	Allow the sum of 10% (ten percent) of the above sub total for Contingencies to be spent as the Principal Agent may direct and to be deducted in whole or in part if not required		R	
	TOTAL INCLUDING CONTINGENCIES		R	
	VALUE ADDED TAX			
	Value Added Tax [15%]		R	
	Carried to Form of Tender		R	

PART C: THE CONTRACT
Part C3: Scope of Work

PROJECT TITLE:	APPOINTMENT OF A CONTRACTOR FOR THE CONSTRUCTION OF VARIOUS INFRASTRUCTURE PROJECTS, INCLUDING INSTALLATION OF BIOSECURITY MEASURES AND RENOVATIONS TO ANIMAL ENCLOSURES, FOR THE SOUTH AFRICAN NATIONAL BIODIVERSITY INSTITUTE (SANBI) AT THE NATIONAL ZOOLOGICAL GARDEN IN PRETORIA
	SANBI: NZG412/2022

		Page
C3.1	DESCRIPTION OF THE WORKS	172
C3.2	DESIGN & CONSTRUCTION	175
C3.3	DRAWINGS	176

Status

Should any requirement or provision in the parts of the Scope of Work conflict with any requirement of any Standardised Specification, Particular Specification or any drawings, the order of precedence, unless otherwise specified, is:

Drawings

Scope of Work

Standardised Specifications

PART C: THE CONTRACT
Part C3: Scope of Work

PROJECT TITLE:	APPOINTMENT OF A CONTRACTOR FOR THE CONSTRUCTION OF VARIOUS INFRASTRUCTURE PROJECTS, INCLUDING INSTALLATION OF BIOSECURITY MEASURES AND RENOVATIONS TO ANIMAL ENCLOSURES, FOR THE SOUTH AFRICAN NATIONAL BIODIVERSITY INSTITUTE (SANBI) AT THE NATIONAL ZOOLOGICAL GARDEN IN PRETORIA
CONTRACT NO:	**SANBI: NZG412/2022**

C 3.1. Description of the Works

C3.1.1 Background

The National Zoological Garden (NZG) of South Africa is the largest zoo in the country. More than 600 000 people visit the NZG annually. The total length of the walkways in the NZG in Pretoria is approximately 6 km. The NZG was previously an agency of the Department of Science and Technology. It was incorporated into SANBI on 1 April 2018 in terms of the National Environmental Management: Biodiversity Act (NEMBA).

The 85-hectare campus in Pretoria houses 3 117 specimens of 209 mammal species, 1 358 specimens of 202 bird species, 3 871 specimens of 190 fish species, 388 specimens of four invertebrate species, 309 specimens of 93 reptile species, and 44 specimens of seven amphibian species. An aquarium and reptile park also form part of the NZG. The aquarium is the largest inland marine aquarium in the country. Furthermore, the third largest collection of exotic trees in South Africa can be found at the NZG.

The Department of Forestry, Fisheries and the Environment (DFFE) has allocated funds over the 2020/21 financial year and continuing into the current financial year towards an infrastructure programme to be implemented at the NZG. Specific infrastructure work packages have been identified for design and / or implementation at the NZG campus over three years, starting in 2019. SANBI has appointed a multi-disciplinary team of service providers for the assessment, design, procurement and project management for the construction of various infrastructure projects, including installation of biosecurity measures and renovations to mammal enclosures, for the South African National Biodiversity Institute (SANBI) at the NZG in Pretoria.

C3.1.2 Scope of Works

The scope of works per phase includes, but is not necessarily limited to, the following:

Note: All works to be carried out according to SANS standards

This scope is arranged in the order of importance (letters refers to the drawings)

H. Ground Hornbill enclosures (the following works are to be done to all four Ground hornbill enclosures – General arrangement has been provided; refer to the drawings provided (H1, H2, H3, H4))

- Replacement of all existing wire mesh with smaller wire mesh (welded/ diamond mesh) of apertures size in line with the designs
- Replacement and Painting of existing side posts 5 mm thickness

J. Australian bird enclosures (Site plan has been provided to be shown to contractor upon the site visit)

- Replacement of all existing wire mesh with smaller aperture size than existing
- Install removable biosecurity netting above roof wire mesh.

E. Back of house bird cages

- Extend the existing back of house parrot cages to reach boundary wall
- Install removable biosecurity netting above roof wire mesh. Replace all existing wire mesh to specified sizes

F. New Crane camp

- Provide a method statement for the removal of the two large trees
- Installation of new proposed steel enclosure with smaller size wire mesh and roof netting

A. Installation of biosecurity measures

- Providing movable vehicle tyre disinfectant wash at vehicle entrance
- Provide foot disinfectant baths at all pedestrians gates

B. Baboon row

- Replacement of thatch roof with Harvey roof tiles
- Raising steel roof as detailed in the drawings

C. Circular mammal enclosures (For all six of them, drawings have been provided)

- Waterproof the concrete roofs
- Remove existing paving
- Remove internal circular fencing and handrails
- Install V shaped tinted one-way view glass at viewing area
- On each enclosure, divide by providing 300 mm high wall installed with wire mesh along the dividing wall
- Replace all wooden service doors with metal doors (some doors to have viewing windows)
- Hatch opening pulleys to be services or replaced
- Remove the trees in the center and those that are buckling trusses
- Replace wire mesh around the enclosure perimeter
- Extend pergola, install wire mesh to match existing on top and paint it with eco-friendly paint
- Reinstate landscaping and enclosure furniture

D. Parrot rows

- Install smaller sized meshing around the perimeter of the enclosure

Install removable biosecurity netting above roof wire mesh.**G. Raptor row**

- Strip all structural poles
- Rust proof all poles
- Undercoat and paint all poles matt black
- Replace all wire mesh with welded mesh as specified
- Raise height of identified enclosures

I. Duck Pond

- Install steel panels with aperture which have wire mesh with specified aperture all around the perimeter all the duck pond
- Fill existing gap
- Reinstate pond
- Seal pond to contain water
- Install double door-sized gate
- Install roof netting

K. Chicken row

- Install steel enclosure around the perimeter of the chicken row with hockey goal netting or bird proof netting as a roof
- Replace Existing mesh found on panels with smaller apertures (SANS approved)
- Fill in gaps between adjoining panels

C3.1.3 Location of the Works

The project is located at the National Zoological Garden in Pretoria, Gauteng.

Part C3: Scope of Work

PROJECT TITLE:	APPOINTMENT OF A CONTRACTOR FOR THE CONSTRUCTION OF VARIOUS INFRASTRUCTURE PROJECTS, INCLUDING INSTALLATION OF BIOSECURITY MEASURES AND RENOVATIONS TO ANIMAL ENCLOSURES, FOR THE SOUTH AFRICAN NATIONAL BIODIVERSITY INSTITUTE (SANBI) AT THE NATIONAL ZOOLOGICAL GARDEN IN PRETORIA
CONTRACT NO:	**SANBI: NZG412/2022**

C3.2. Design & Construction

This project is to appoint a contractor for the construction of various construction projects, including installation of biosecurity measures and renovations to animal enclosures, for the South African National Biodiversity Institute (SANBI) at the National Zoological Garden in Pretoria. All designs for all structures have been completed and attached to this tender document to enable your overall price for this project.

C3.2.1 Initial Basic Structural Information: (To be provided)

All structural designs and relevant documentations are provided for in this tender document.

C3.2.2 Site Camp

No major site camp is envisioned for this project, and should there be a need, the area must be kept to an absolute minimum. There are open areas around the Zoo which may be used for a small site camp. No large containers will be allowed for offices or storage. Water and electricity area available on site. Security of the site and materials is the sole responsibility of the Contractor.

C3.2.3 Equipment / Plan

No large plant is envisioned for the project. The majority of work should be labour intensive with hand operated tools. Should there be a need to bring on worksite a large machinery, it should be as per the arrangement with Employer or Employer's representative. Any damage or disturbance of the site/infrastructure by large machinery will have to be remediated at the cost of the Contractor.

C3.2.4 Applicable Project Specifications

Refer to the both the Scope of Work and the attached Designs

PART C: THE CONTRACT

Part C3: Scope of Work

PROJECT TITLE:	APPOINTMENT OF A CONTRACTOR FOR THE CONSTRUCTION OF VARIOUS INFRASTRUCTURE PROJECTS, INCLUDING INSTALLATION OF BIOSECURITY MEASURES AND RENOVATIONS TO ANIMAL ENCLOSURES, FOR THE SOUTH AFRICAN NATIONAL BIODIVERSITY INSTITUTE (SANBI) AT THE NATIONAL ZOOLOGICAL GARDEN IN PRETORIA
CONTRACT NO:	**SANBI: NZG412/2022**

C3.3. DRAWINGS

C3.3.1 Drawings List:

Site Layout

1. ENG7064A1WL PDD SANBI NZG LAYOUT-KP001

Structural drawings with specifications

1. Back of house Parrot Row-STR-DRW-0004
2. Baboon Rows-STR-DRW-0011
3. Back of Raptors-STR-DRW-0005
4. Bio-security For Truck-STR-DRW-0006
5. Circular Mammal Enclosures-STR-DRW-00013
6. Duck Pond-STR-DRW-0016
7. Raptor Row-STR-DRW-0015
8. Chicken Row-STR-DRW-00017
9. New Crane Camp-STR-DRW005

General arrangements drawings with specifications

1. Ground Hornbill, H1, H2, H3&H4-STR-DRW-0001
2. Ground Hornbill, H1, H2, H3&H4-STR-DRW-0002

Specification documents only

1. Australian bird. Rpt0002
2. Confiscated Parrot Row.Rpt0008

The drawings are contained in Annexure A provided separately.

Appendix A: DRAWINGS

SITE LAYOUT

NOTES AND SPECIFICATIONS:

1. ALL MATERIAL AND WORKMANSHIP MUST COMPLY WITH THE REQUIREMENTS OF THE LATEST RELEVANT SANS REQUIREMENTS AS APPLICABLE.
2. ALL DIMENSIONS ARE IN METERS. (UNLESS OTHERWISE SPECIFIED)
3. DO NOT SCALE, USE FIGURED DIMENSIONS ONLY. ALL DIMENSIONS AND LEVELS TO BE CHECKED AND VERIFIED BEFORE ANY WORK COMMENCES. ANY DISCREPANCY SHALL BE REPORTED TO THE ENGINEER IMMEDIATELY.
4. ALL DIMENSIONS MUST BE CHECKED AND APPROVED ON SITE.
5. THIS DRAWING MUST BE READ IN CONJUNCTION WITH THE SANS1200 AS APPLICABLE.
5. THIS DRAWING MUST BE READ IN CONJUNCTION WITH THE PROJECT SPECIFICATIONS AND STANDARD DETAILS.
6. FINAL POSITION OF SERVICES TO BE DETERMINED ON SITE
7. THE CONTRACTOR SHALL WHERE NECESSARY DETERMINE THE EXACT LOCATION OF EXISTING SERVICES AND PROTECT THEM FROM DAMAGE THROUGHOUT THE DURATION OF THE WORKS.
8. NO CONSTRUCTION WORK TO COMMENCE UNTIL LAND AND SERVITUDE ACQUISITIONS HAVE BEEN COMPLETED
9. THE CONTRACTOR IS RESPONSIBLE FOR PROTECTING THE WORKS FROM SURFACE RUNOFF THAT MAY CAUSE EROSION DAMAGE USING CHANNEL, BERMS,PUMPS, etc. AS AND WHEN REQUIRED AND IS TO DIRECT GROUND WATER AWAY FROM THE WORKS.
10. ALL LEVELS GIVEN IN METRES ABOVE SEA LEVEL.
11. SETTING OUT COORDINATES ARE IN WGS 84 SYSTEM.

DRAWING LEGEND

WIRE MESH FENCE

BRICK WALL

REDUCED PLAN USE SCALE BELOW

REVISION TABLE

NO.	DATE	DESCRIPTION
A	17 JUNE 2021	ISSUED FOR FEASIBILITY/ INCEPTION

CONSULTANT:

JENDZA CAPITAL
JENDZA CAPITAL
6 Bates House, Tyball Place,
Waterfall Office Park,
Bekker Street, Vorna Valley,
Midrand
Tel. 010 824 1360
Fax. 086 549 2686

CLIENT:

SANBI
Biodiversity for Life
South African National Biodiversity Institute

SOUTH AFRICAN NATIONAL BIODIVERSITY (SANBI)
NATIONAL ZOOLOGICAL GARDENS
232 BOOM ST, DASPOORT 319-JR, PRETORIA

PROJECT NAME:

SANBI NZG BIOSECURITY MEASURES AND

RENOVATIONS TO MAMMAL ENCLOSURES

DRAWING TITLE:

INCEPTION KEY PLAN

SHEET 1 OF 1

DRAWING DEVELOPMENT

DESIGNED BY:	A.Kapata	JUN 2021
DRAWN BY:	A.Kapata	JUN 2021
CHECKED BY:	P.Madondo	JUN 2021
APPROVED BY:	M.Mashele	JUN 2021
CLIENT APPROVAL		JUN 2021

PROJECT NO:	DRAWING NO:	SCALE	SHEET NO:	REV:
G360/2020	7064KP001	1:2000	1 OF 1	A

STRUCTURAL DRAWINGS

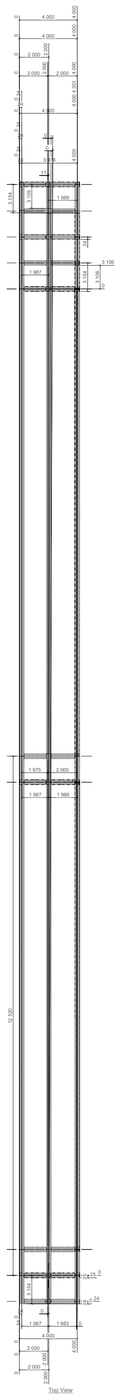

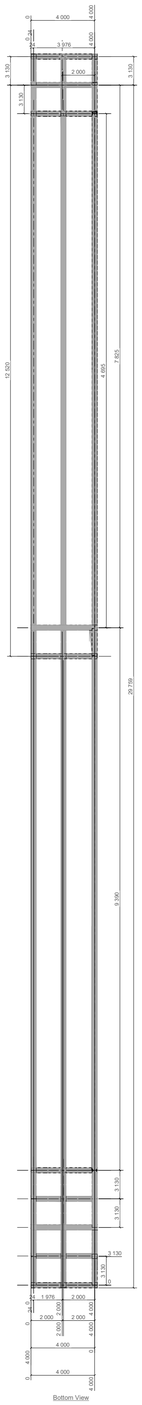

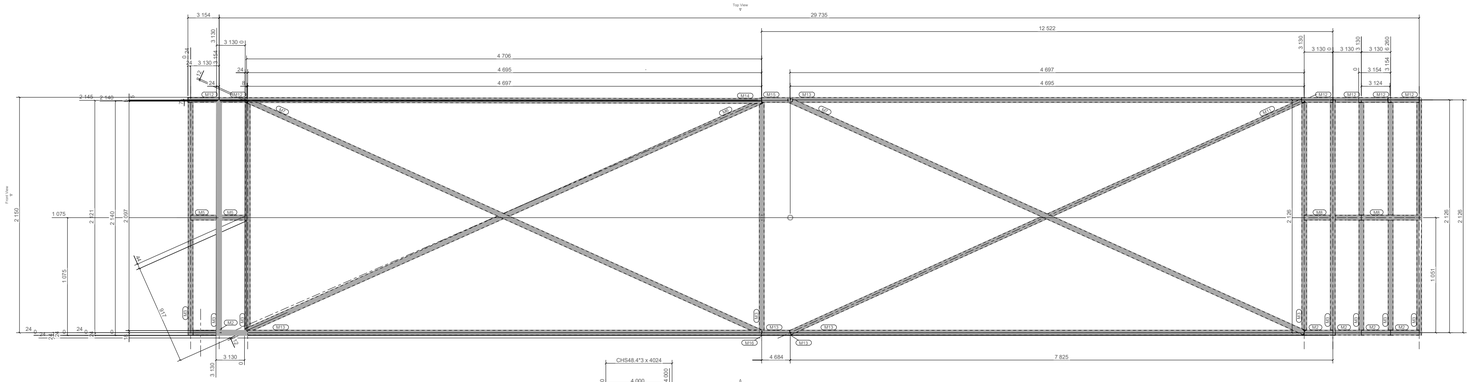

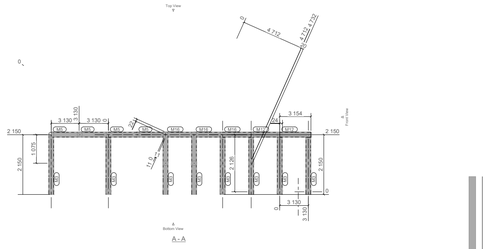

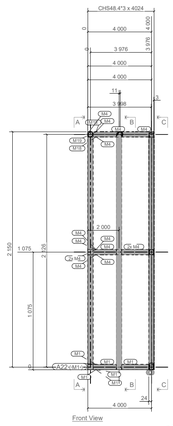

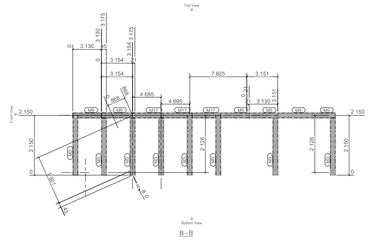

WIRE MESH TO BE MIN 2.5mm THICK 20x20mm APERTURE, ALTERNATIVELY PROVIDE WELDED MESH WITH LARGER APERTURE BUT THE VERTICAL HIGHT TO BE =<20mm

ESTIMATED AREA OF REQUIRED WIRE MESH IS ABOUT 220 m^2

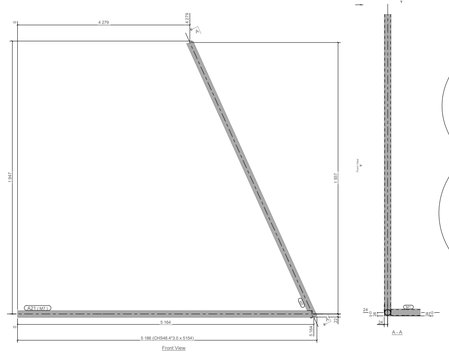

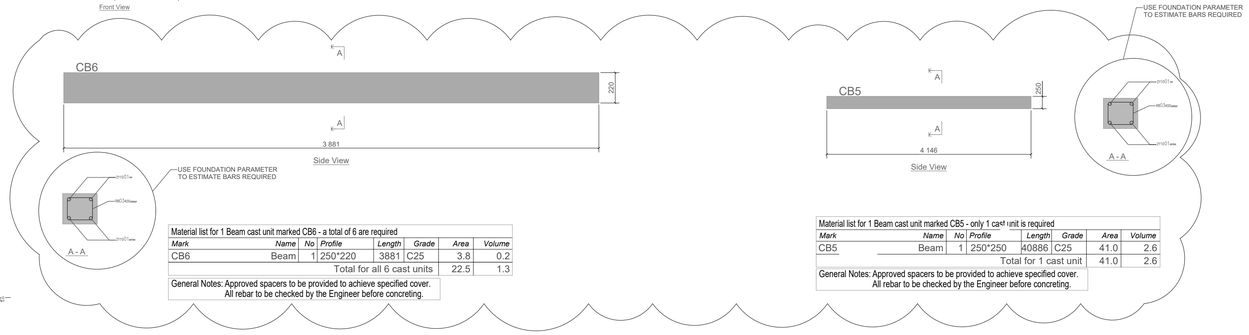

Material list for 1 Beam assembly marked A22 - only 1 is required

Mark	No	Profile	Length	Grade	Paint area	Mass
M1	7	CHS48.4*3	4024	S355JR	4.2	90.3
M2	5	CHS48.4*3	3130	S355JR	2.4	50.2
M3	25	CHS48.4*3.0	2150	S355JR	8.2	180.1
M4	15	CHS48.4*3.0	4024	S355JR	9.2	202.2
M5	10	CHS48.4*3.0	3130	S355JR	4.7	104.9
M6	1	CHS48.4*3.0	5152	S355JR	0.8	17.3
M7	2	CHS48.4*3.0	5154	S355JR	1.6	34.5
M8	2	CHS48.4*3.0	6260	S355JR	1.9	41.9
M9	2	CHS48.4*3.0	3175	S355JR	1.0	21.3
M11	1	CHS43.88*3	5154	S355JR	0.7	14.9
M12	8	CHS48.4*3.0	3155	S355JR	3.8	84.5
M13	5	CHS48.4*3	4695	S355JR	3.5	75.3
M14	1	CHS48.4*3.0	4719	S355JR	0.7	15.8
M15	1	CHS48.22*3	4697	S355JR	0.7	15.0
M16	4	CHS48.4*3.0	4695	S355JR	2.8	62.9
M17	3	CHS48.4*3.0	4716	S355JR	2.1	47.4
M18	2	CHS48.4*3.0	4021	S355JR	1.2	26.9
M19	1	CHS48.4*3.0	4022	S355JR	0.6	13.5
Total for this 1 assembly					50.2	1098.9

Material list for 1 Beam cast unit marked CB6 - a total of 6 are required

Mark	Name	No	Profile	Length	Grade	Area	Volume
CB6	Beam	1	250*220	3881	C25	3.8	0.2
					Total for all 6 cast units	22.5	1.3

General Notes: Approved spacers to be provided to achieve specified cover. All rebar to be checked by the Engineer before concreting.

Material list for 1 Beam cast unit marked CB5 - only 1 cast unit is required

Mark	Name	No	Profile	Length	Grade	Area	Volume
CB5	Beam	1	250*250	40886	C25	41.0	2.6
					Total for 1 cast unit	41.0	2.6

General Notes: Approved spacers to be provided to achieve specified cover. All rebar to be checked by the Engineer before concreting.

COPYRIGHT

This document is the property of SANBI. Use or copying of the document in whole or in part without written permission of SANBI constitute infringement

STRUCTURAL CALCULATION FILE NO. XXX N/A

DESIGNED & APPROVED IN ACCORDANCE WITH S.A.N.S. 10111 ENGINEERING DRAWINGS

MINE – NOTED	NAME	DATE	SIGNATURE
STRUCTURAL ENGINEER			
ENGINEERING MANAGER			
PROJECT ENGINEER			
PROCESS MANAGER			
SECTION ENGINEER			
CONSTR. MANAGER			

CONSULTANT:
JENDZA CAPITAL
JENDZA CAPITAL
6 Bates House, Tybalt Place,
Waterfall Office Park,
Bekker Street, Vorna Valley,
Midrand
Tel. 010 824 1360
Fax. 086 549 2686

CLIENT:
SANBI Biodiversity for Life
South African National Biodiversity Institute
SOUTH AFRICAN NATIONAL BIODIVERSITY (SANBI)
NATIONAL ZOOLOGICAL GARDENS
232 BOOM ST, DASPOORT 319-JR, PRETORIA

PROJECT NAME:
SANBI NZG BIOSECURITY MEASURES AND RENOVATIONS TO MAMMAL ENCLOSURES

DRAWING TITLE:
BACK OF THE HOUSE PARROT ROW STRUCTURE

REVISION TABLE

NO.	DATE	DESCRIPTION

DRW NO: G360/2020-STR-DRW0004

PROJECT NO:	SCALE	SHEET NO:	REV:
G360/2020	N.T.S	1 OF 1	Z

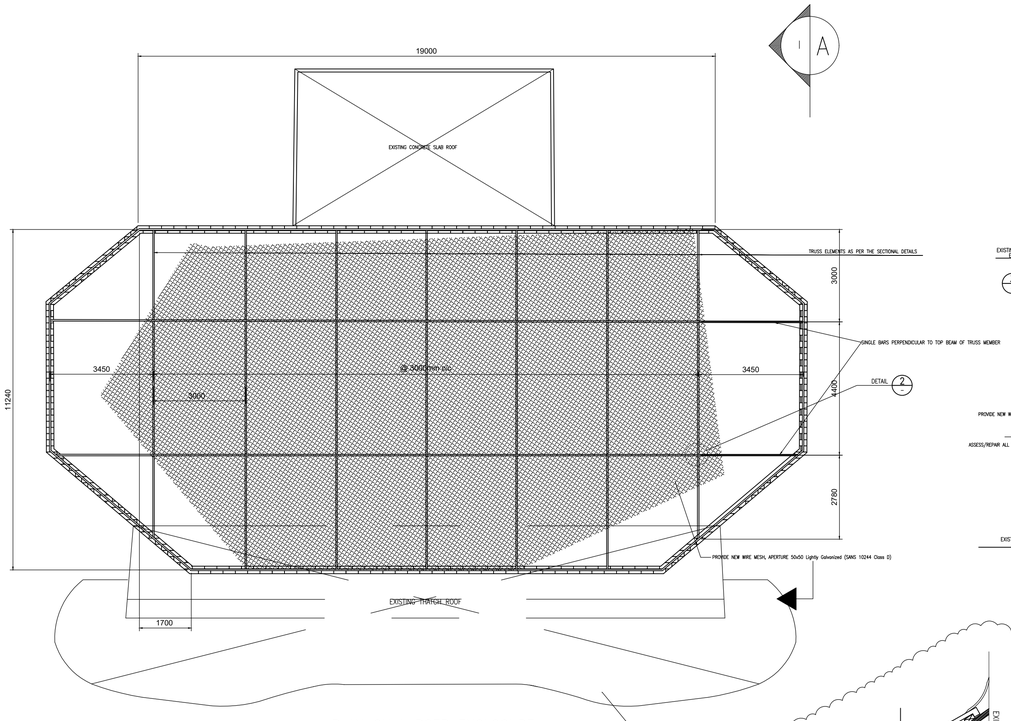

PLAN ON LARGER ENCLOSURE

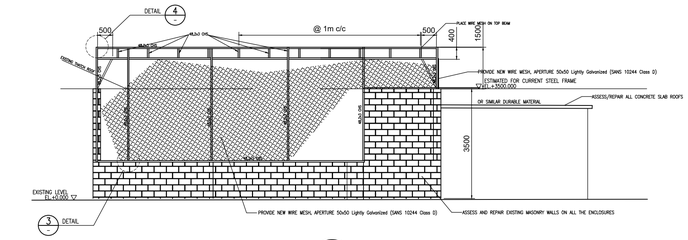

DETAIL A
N.T.S

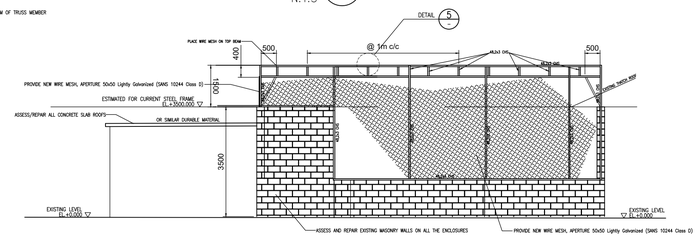

DETAIL B
N.T.S

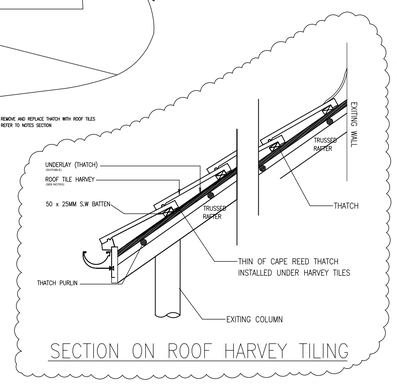

SECTION ON ROOF HARVEY TILING

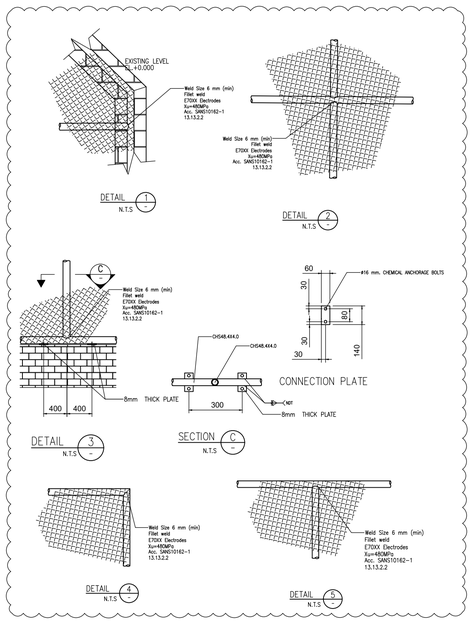

THATCH ROOF

- REMOVE ALL THATCH ON ROOF
- ASSES EXISTING MEMBERS, REMOVER AND REPLACE/BRACE WEAK MEMBERS
- ENSURE COMPLETE STRUCTURAL INTEGRITY
- INSTALL/PLACE ROOF TILES WITH AID OF ROOF TILE PURLINS, USE HARVEY TILE AND REPLACE THATCH WITH NEW WHERE NECESSARY.
- ALL TILING AND INSTALLATION MUST COMPLY WITH SANS 062:1991 CODE OF PRACTICE

TREES AND FLOWERS

- SOME TREES NEEDS TO BE CUT DOWN, CONSULT WITH THE CLIENT
- TRIM THE REST OF THE TREES ACCORDINGLY
- FLOWERS MAY NEED RELOCATING AND PLACED BACK, CONSULT WITH THE CLIENT

ARTIFICIAL ROCKY WALLS

- NEED TO BE REPAIRS AFTER INSTALLATION OF NEW ROOF

PICKETS AND POLES

- REPAIR/REPLACE DAMAGED PICKETS AND POLES ON ALL FENCING, ALL GAPS TO BE COVERED

MATERIAL

- CONSIDER THE REUSE OF MATERIAL WHERE APPLICABLE, ONLY IF THE MATERIAL HAS NOT LOST ITS ORIGINAL STRENGTH.

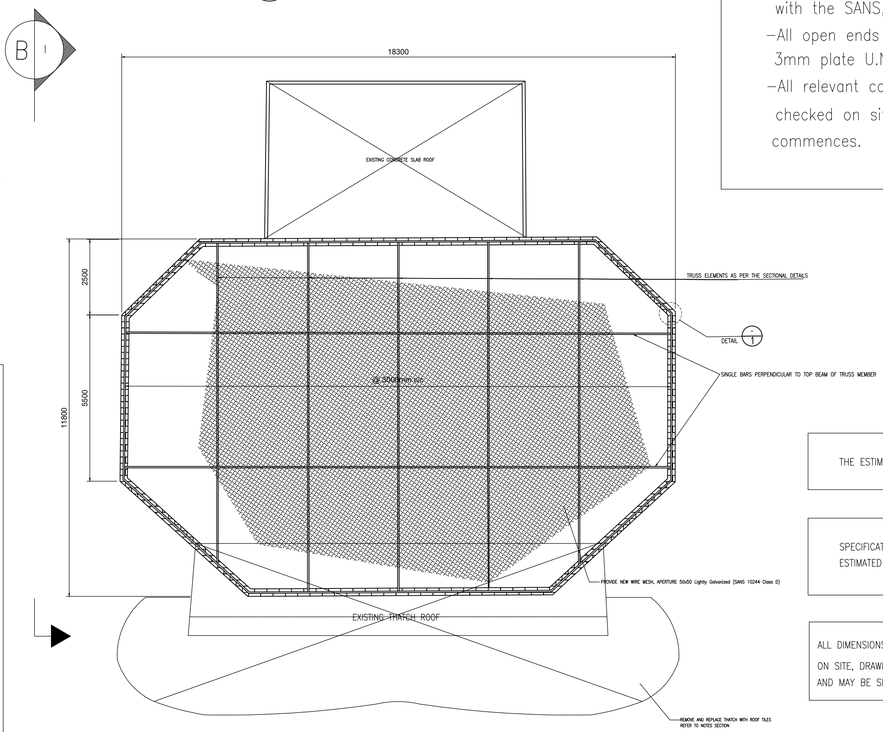

PLAN ON THE SMALLER ENCLOSURES

NOTES

- All steelwork to be fabricated to SANS 2001-CS1:2012, must comply with SANS 1921-3 and the project specifications.
- Drilled holes for bolted connections shall have a the bolt diameter U.N.O minimum of 2mm larger than (Unless Noted Otherwise).
- Heavy duty washers shall be provided provided for all oversized overhead and slotted holes
- Min edge distances for connections shall be in accordance with SANS 10162 U.N.O
- All bolts shall be IOS bolts of class 8.8 in accordance with SANS 1700-5-1
- All welds and preparations to be specified and executed in accordance with AWS D1.1
- All fillet weld shall be 6mm (min) and shall be sealed and impervious U.N.O
- No field welds be permissible unless prior approval is obtained from the engineer.
- For approved full penetration filed welds, backing plates shall be used. Take weld backing plate to appropriate member shipment U.N.O.
- All welded surfaces preparations shall be discussed, inspected and approved by the engineer in conjunction with the SANS, or other approved inspection agency.
- All open ends of hollow sections shall be sealed with 3mm plate U.N.O.
- All relevant concrete and steel dimensions shall be checked on site before manufacture of structural steel commences.

THE ESTIMATED WALKWAY ROOF IS ABOUT 254m^2

SPECIFICATIONS FOR A TOTAL OF FIVE ENCLOSURES
ESTIMATED ONE BIG ENCLOSURE

ALL DIMENSIONS MUST BE CAREFULLY CHECKED
ON SITE, DRAWING WAS DONE BASED ON ROUGH ESTIMATES AND MAY BE SLIGHTLY OFF TO WHAT IS ON SITE

COPYRIGHT

This document is the property of SANBI.
Use or copying of the document in whole or in part without written permission of SANBI constitute infringement

STRUCTURAL CALCULATION FILE NO. XXX N/A

DESIGNED & APPROVED IN ACCORDANCE WITH S.A.N.S. 10111 ENGINEERING DRAWINGS

MINE - NOTED	NAME	DATE	SIGNATURE
STRUCTURAL ENGINEER			
ENGINEERING MANAGER			
PROJECT ENGINEER			
PROCESS MANAGER			
SECTION ENGINEER			
CONSTR. MANAGER			

CONSULTANT:
JENDZA CAPITAL.
JENDZA CAPITAL
6 Bates House, Tybalt Place,
Waterfall Office Park,
Bekker Street, Vorna Valley,
Midrand
Tel. 010 824 1360
Fax. 086 549 2686

CLIENT:
SANBI Biodiversity for Life
South African National Biodiversity Institute
SOUTH AFRICAN NATIONAL BIODIVERSITY (SANBI)
NATIONAL ZOOLOGICAL GARDENS
232 BOOM ST, DASPOORT 319-JR, PRETORIA

PROJECT NAME:
SANBI NZG BIOSECURITY MEASURES AND RENOVATIONS TO MAMMAL ENCLOSURES

DRAWING TITLE:
BABOON ROWS AND WALKWAY ROOF

REVISION TABLE

NO.	DATE	DESCRIPTION
1	20 August 2021	ADDITIONAL INFORMATION, WALKWAY ROOF DETAILING

DRW NO: G360-2020-STR-DRW0011

PROJECT NO:	SCALE	SHEET NO:	REV:
G360/2020	N.T.S	1 OF 1	2

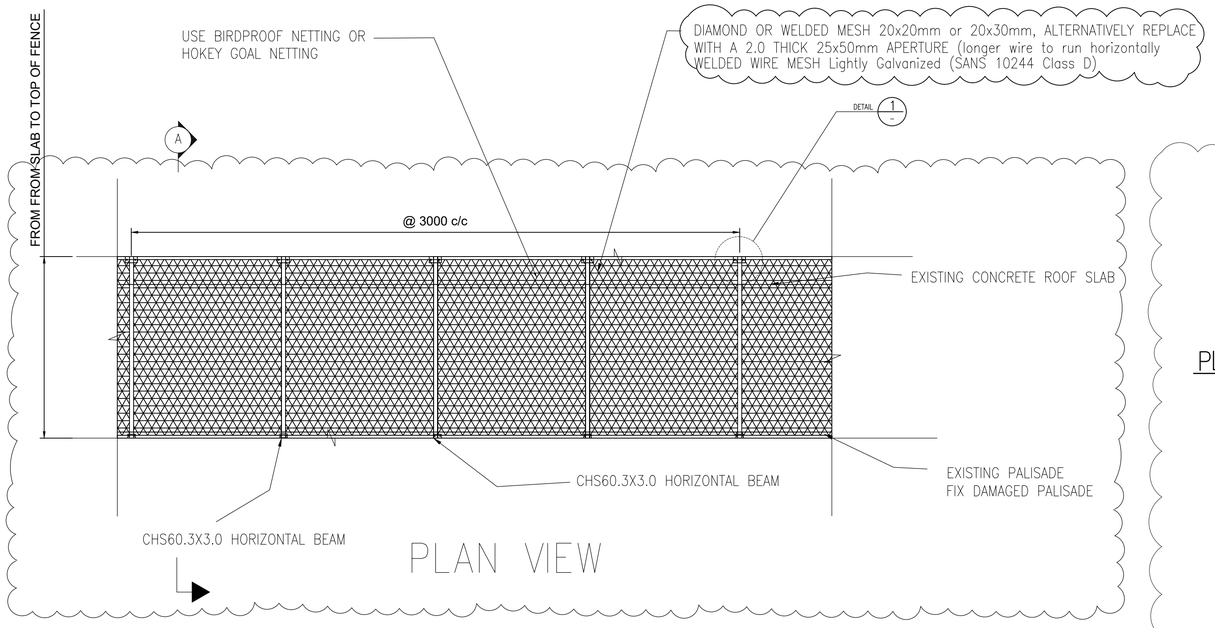

PLAN VIEW

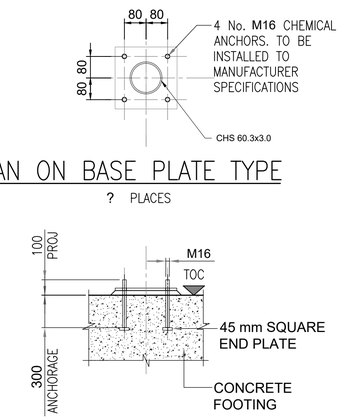

PLAN ON BASE PLATE TYPE

? PLACES

CROSS SECION

NOTES

GENERAL

- All steelwork to be fabricated to SANS 2001-CSI1:2012, must comply with SANS 1921-3 and the project specifications.
- Drilled holes for bolted connections shall have a minimum of 2mm larger than the bolt diameter U.N.O (Unless Noted Otherwise).
- Heavy duty washers shall be provided provided for all oversized overhead and slotted holes
- Min edge distances for connections shall be in accordance with SANS 10162 U.N.O (Unless Noted Otherwise).
- All bolts shall be IOS bolts of class 8.8 in accordance with SANS 1700-5-1
- All welds and preparations to be specified and executed in accordance with AWS D1.1
- All but welds to develop the full strength the sections being jointed
- All fillet weld shall be 6mm (min) and shall be sealed and impervious U.N.O
- No field welds be permissible unless prior approval is obtained from the engineer. For approved full penetration filed welds, backing plates shall be used. Take weld backing plate to appropriate member shipment U.N.O.
- All welded surfaces preparations shall be discussed, inspected and approved by the engineer in conjunction with the SANS, or other approved inspection agency.
- All open ends of hollow sections shall be sealed with 3mm plate U.N.O.
- All relevant concrete and steel dimensions shall be checked on site before manufacture of structural steel commences.

REMEDIAL WORK

- Repair/replace all damaged palisades
- Repair all damaged areas on the roof slab
- Drill and clean all anchorage bolts holes on palisade and roof slab
- Anchor all the relevant members and place bird net

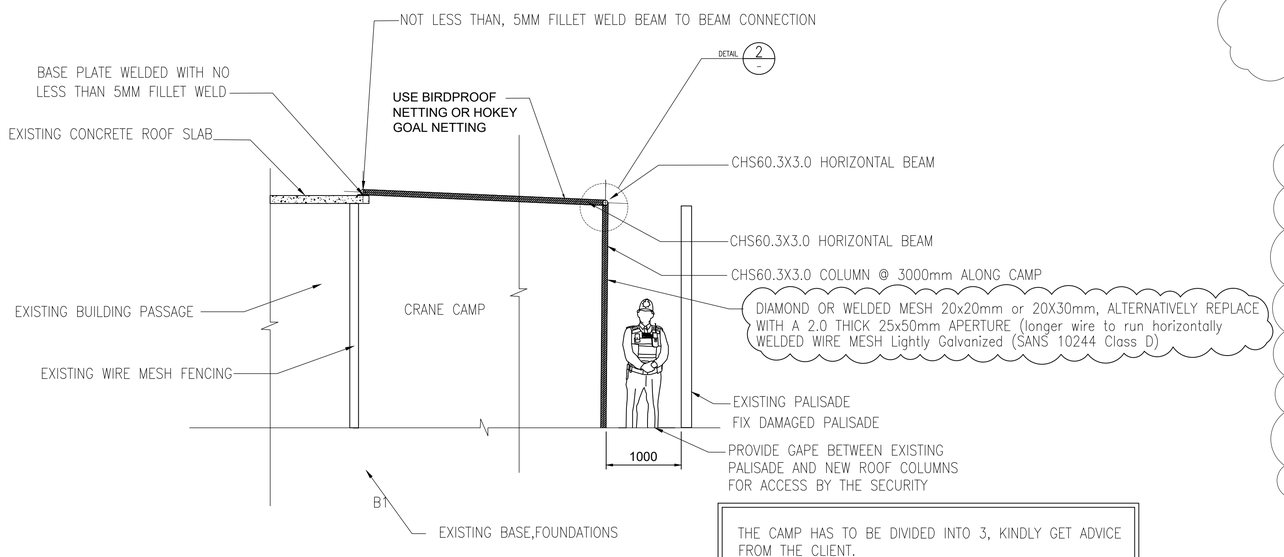

SECTION A

THE CAMP HAS TO BE DIVIDED INTO 3, KINDLY GET ADVICE FROM THE CLIENT.

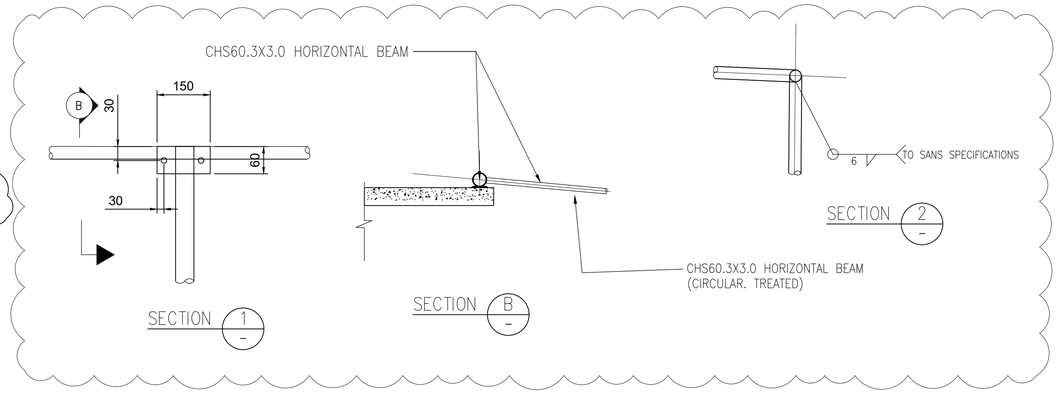

COPYRIGHT

This document is the property of SANBI. Use or copying of the document in whole or in part without written permission of SANBI constitute infringement

STRUCTURAL CALCULATION FILE NO. XXX N/A

DESIGNED & APPROVED IN ACCORDANCE WITH S.A.N.S. 10111 ENGINEERING DRAWINGS

MINE - NOTED	NAME	DATE	SIGNATURE
STRUCTURAL ENGINEER			
ENGINEERING MANAGER			
PROJECT ENGINEER			
PROCESS MANAGER			
SECTION ENGINEER			
CONSTR. MANAGER			

CONSULTANT:
JENDZA CAPITAL
JENDZA CAPITAL
6 Bates House, Tybalt Place,
Waterfall Office Park,
Bekker Street, Vorna Valley,
Midrand
Tel. 010 824 1360
Fax. 086 549 2686

CLIENT:
SANBI
Biodiversity for Life
South African National Biodiversity Institute
SOUTH AFRICAN NATIONAL BIODIVERSITY (SANBI)
NATIONAL ZOOLOGICAL GARDENS
232 BOOM ST, DASPOORT 319-JR, PRETORIA

PROJECT NAME:
SANBI NZG BIOSECURITY MEASURES AND RENOVATIONS TO MAMMAL ENCLOSURES

DRAWING TITLE:
BACK OF RAPTOR

REVISION TABLE

NO.	DATE	DESCRIPTION
1	20 August 2021	NET SPECIFICATION

DRW NO: G360/2020-STR-DRW-0005

PROJECT NO:	SCALE	SHEET NO:	REV:
G360/2020	N.T.S	1 OF 1	2

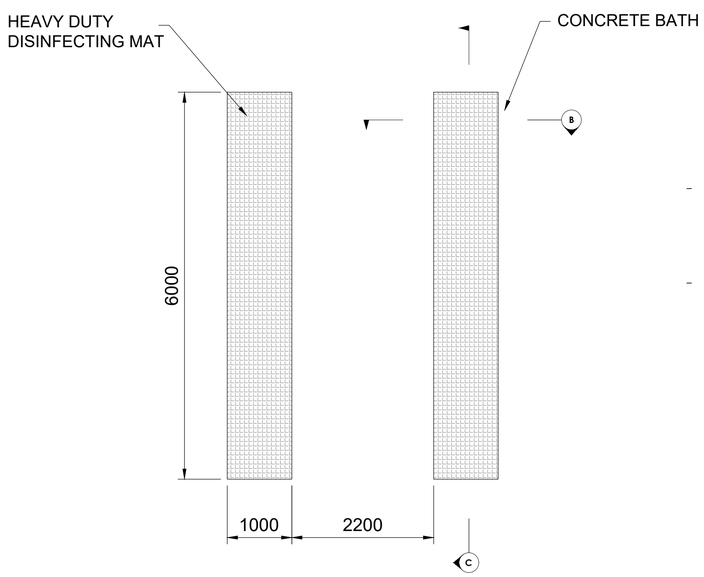

TOP VIEW ON MATS

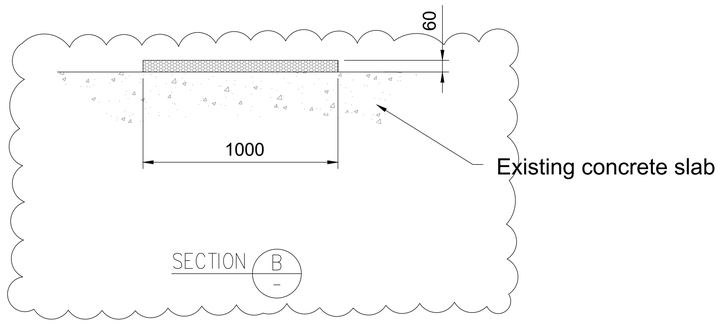

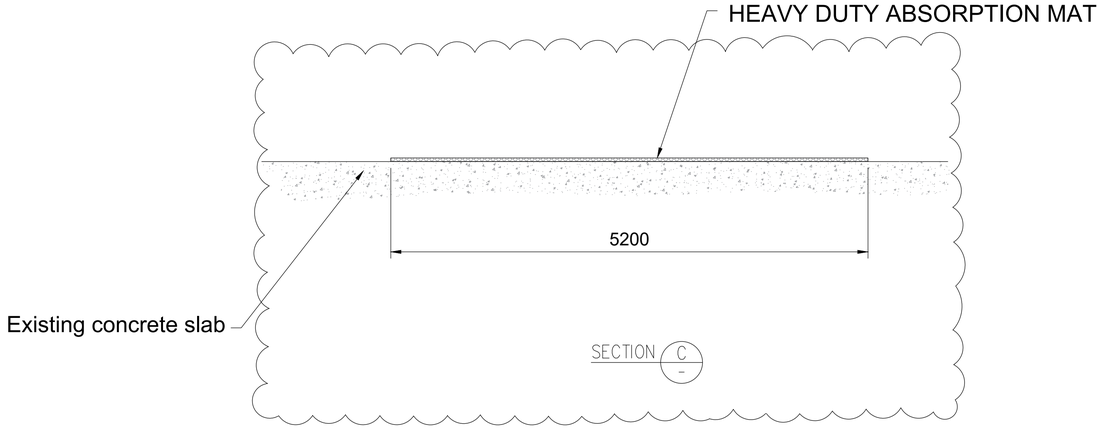

COPYRIGHT

This document is the property of SANBI.
Use or copying of the document in whole or in part without written permission of SANBI constitute infringement

STRUCTURAL CALCULATION FILE NO. XXX N/A

DESIGNED & APPROVED IN ACCORDANCE WITH S.A.N.S. 10111 ENGINEERING DRAWINGS

MINE – NOTED	NAME	DATE	SIGNATURE
STRUCTURAL ENGINEER			
ENGINEERING MANAGER			
PROJECT ENGINEER			
PROCESS MANAGER			
SECTION ENGINEER			
CONSTR. MANAGER			

CONSULTANT:

JENDZA CAPITAL

JENDZA CAPITAL
6 Bates House, Tyball Place,
Waterfall Office Park,
Bekker Street, Vorna Valley,
Midrand
Tel. 010 824 1360
Fax. 086 549 2686

CLIENT:

SANBI
Biodiversity for Life
South African National Biodiversity Institute

SOUTH AFRICAN NATIONAL BIODIVERSITY (SANBI)
NATIONAL ZOOLOGICAL GARDENS
232 BOOM ST, DASPOORT 319-JR, PRETORIA

PROJECT NAME:
SANBI NZG BIOSECURITY MEASURES AND RENOVATIONS TO MAMMAL ENCLOSURES

DRAWING TITLE:
BIO-TIRE BATH

REVISION TABLE

NO.	DATE	DESCRIPTION

DRW NO: G360/2020-STR-DRW-0006

PROJECT NO:	SCALE	SHEET NO:	REV:
G360/2020	N.T.S	1 OF 1	2

ELEVATION ON GATE

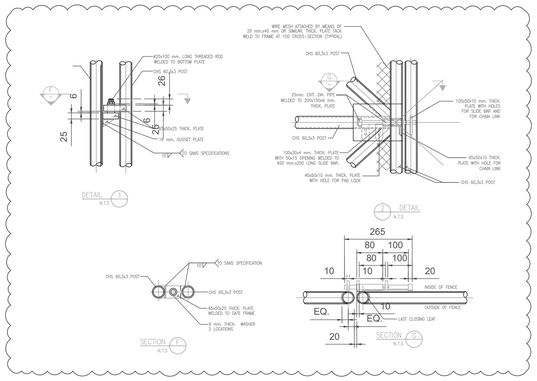

GENERAL REQUIREMENTS FOR 5 ENCLOSURES

- REPLACE NIGHT ROOM DOORS WITH METAL DOOR, ALL DOORS MUST HAVE A VIEWING WINDOW
- EXISTING ROOF SLAB MUST BE REPAIRED AND WATERPROOFED
- ALL OUTSIDE DOORS TO BE REPLACED WITH METAL DOORS (NOTE ALL DOOR FRAMES ARE DIFFERENT SIZE AND ARE NOT STANDARD).
- HATCH OPENING PULLEYS MUST BE SERVICE/REPLACED
- BACK FENCE TO BE REMOVED AND REPLACED WITH NEW FENCE (WIRE MESH ON A 300mm WALL, SEE DETAIL ON DRAWING.
- PROVIDE A 2.5MM THICK 20mmx20mm WIRE MESH ON NEW ENCLOSURE ROOF
- HACK UP AND REMOVE EXISTING PAVING
- REMOVE EXISTING BALUSTRADE, NO LONGER REQUIRED
- EXTEND AND PAINT PERGOLA FRAME WITH ECO-FRIENDLY PAINT, PERGOLA TO COVER THE ENTIRE NEW VIEWING POINT.
- REMOVE REMOVE EXISTING WALL WITHIN THE ENCLOSURES
- PROVED ONE HUMAN GATE ON NEW BOUNDARY FENCE THAT SEPARATES THE THE ENCLOSURES IN TWO, SEE LOCATION ON DRAWING.
- REMOVE THE TREES IN THE CENTER AND THOSE THAT ARE BUCKLING TRUSSES
- ETERNAL ENTRANCE STEEL DOORS, NO WINDOWS REQUIRED ON THESE DOORS
- PROVIDE VIEWING WINDOWS ON THE DOORS LEADING INTO THE NIGHT ROOMS
- PROVIDE A STEEL MESH OR BARED DOORS FOR ALL THE DOORS LEADING INTO THE ENCLOSURES, SEE GENERAL EXAMPLE HERE WITHIN

6th ENCLOSURES TO BE RENOVATED

- PROVIDE A 2000mm HIGH MESH AROUND THE ENCLOSURE PARAMETER
- PAINT PERGOLA FRAME WITH ECO-FRIENDLY PAINT
- EXISTING ROOF SLAB MUST BE REPAIRED AND WATERPROOFED
- REPLACE BROKEN VIEWING GLASS

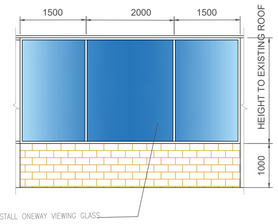

SECTION B

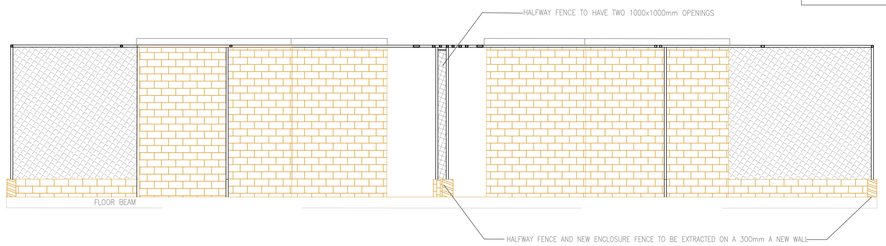

SECTION A

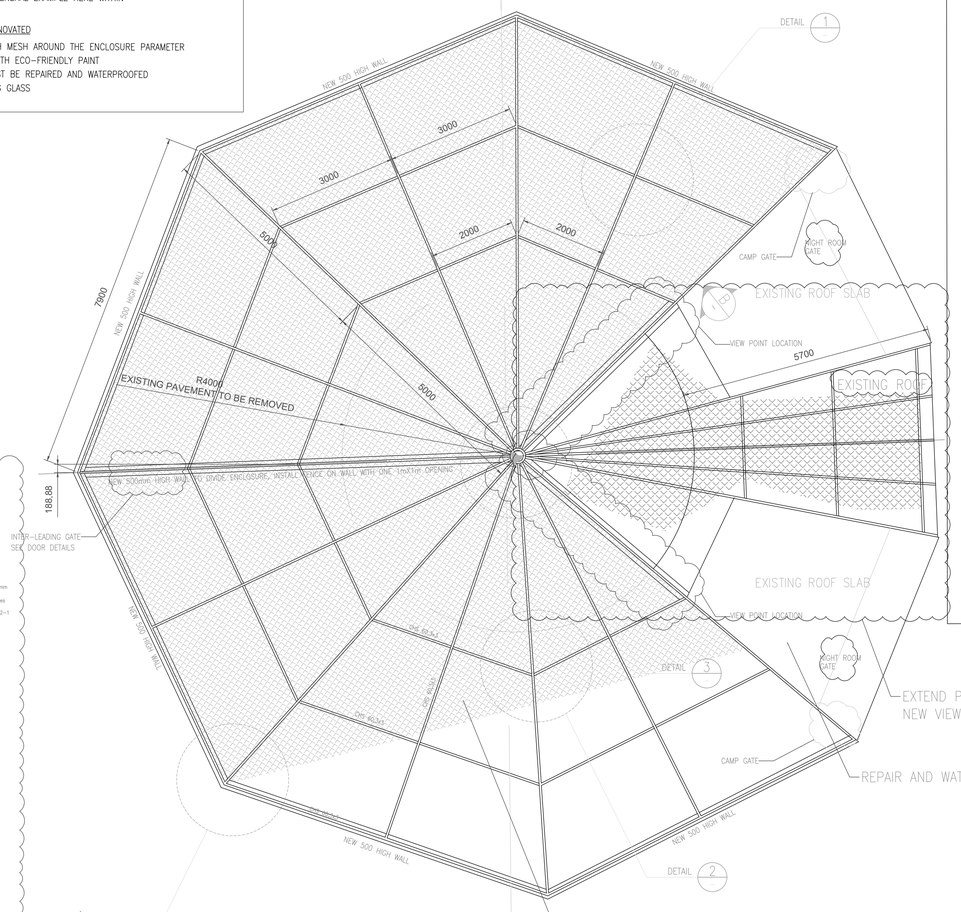

WIRE MESH TO BE MIN 2.5mm THICK 20x20mm APERTURE, ALTERNATIVELY PROVIDE A 2.0 THICK 50x50mm APERTURE WIRE MESH Lightly Galvanized (SANS 10244 Class D) AND OVER IT WITH A BIRD-PROOF NETTING.

PLAN ON ENCLOSURE

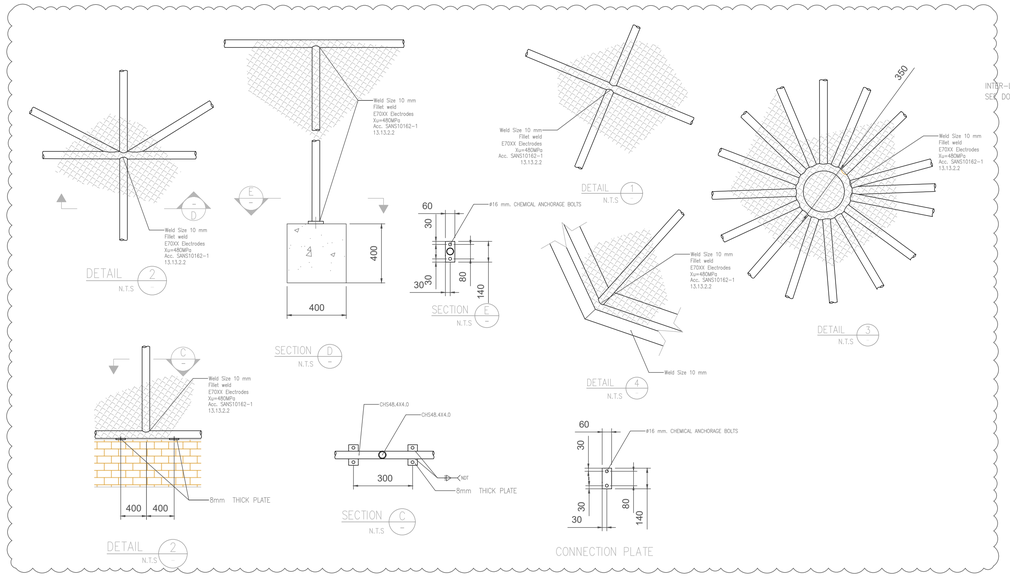

NOTES

- All steelwork to be fabricated to SANS 2001-CSI1:2012, must comply with SANS 1921-3 and the project specifications.
- Drilled holes for bolted connections shall have a the bolt diameter U.N.O minimum of 2mm larger than (Unless Noted Otherwise).
- Heavy duty washers shall be provided provided for all oversized overhead and slotted holes
- Min edge distances for connections shall be in accordance with SANS 10162 U.N.O
- All bolts shall be IOS bolts of class 8.8 in accordance with SANS 1700-5-1
- All welds and preparations to be specified and executed in accordance with AWS D1.1
- All but welds to develop the full strength the sections being jointed
- All fillet weld shall be 6mm (min) and shall be sealed and impervious U.N.O
- No field welds be permissible unless prior approval is obtained from the engineer.
- For approved full penetration filed welds, backing plates shall be used. Take weld backing plate to appropriate member shipment U.N.O.
- All welded surfaces preparations shall be discussed, inspected and approved by the engineer in conjunction with the SANS, or other approved inspection agency.
- All open ends of hollow sections shall be sealed with 3mm plate U.N.O.
- All relevant concrete and steel dimensions shall be checked on site before manufacture of structural steel commences.

FOUNDATION

- Unsuitable material below foundations to be removed as directed by the engineer, and replaced with backfill backfill in accordance with the specification and engineer's instructions.
- The contractor is to confirm all dimensions and levels on site and report any discrepancies to the engineer immediately.
- A minimum notice of 48 hours is required for inspection prior to casting concrete

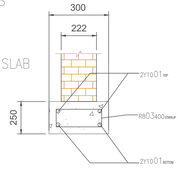

CROSS-SECTION ON FLOOR BEAM
N.T.S

COPYRIGHT

This document is the property of SANBI. Use or copying of the document in whole or in part without written permission of SANBI constitute infringement

STRUCTURAL CALCULATION FILE NO. XXX N/A

DESIGNED & APPROVED IN ACCORDANCE WITH S.A.N.S. 10111 ENGINEERING DRAWINGS

MINE - NOTED	NAME	DATE	SIGNATURE
STRUCTURAL ENGINEER			
ENGINEERING MANAGER			
PROJECT ENGINEER			
PROCESS MANAGER			
SECTION ENGINEER			
CONSTR. MANAGER			

CONSULTANT:

JENDZA CAPITAL.

JENDZA CAPITAL
6 Bates House, Tybalt Place,
Waterfall Office Park,
Bekker Street, Vorna Valley,
Midrand
Tel. 010 824 1360
Fax. 086 549 2686

CLIENT:

SANBI Biodiversity for Life
South African National Biodiversity Institute

SOUTH AFRICAN NATIONAL BIODIVERSITY (SANBI)
NATIONAL ZOOLOGICAL GARDENS
232 BOOM ST, DASPOORT 319-JR, PRETORIA

PROJECT NAME:
SANBI NZG BIOSECURITY MEASURES AND RENOVATIONS TO MAMMAL ENCLOSURES

DRAWING TITLE:
CIRCULAR MAMMAL ENCLOSURES

REVISION TABLE

NO.	DATE	DESCRIPTION
1	20 August 2021	ADDITIONAL DETAILS ON GLASS & FLOOR BEAM

DRW NO: G360/2020-STR-DRW-0013

PROJECT NO:	SCALE	SHEET NO:	REV:
G360/2020	1:250	1 OF 1	2

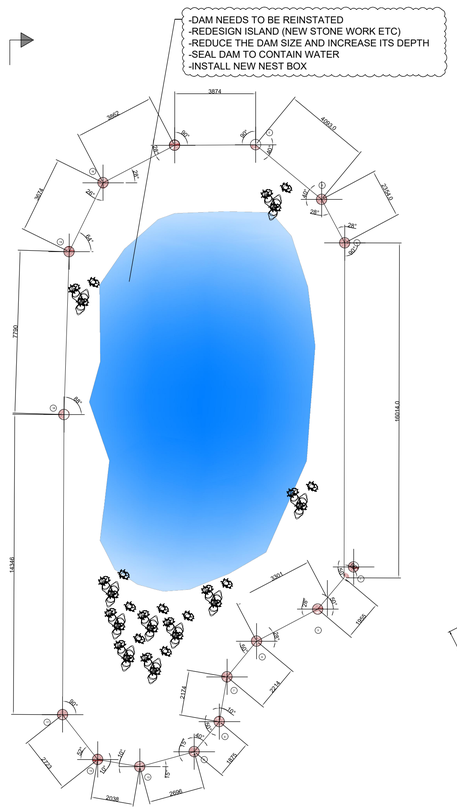

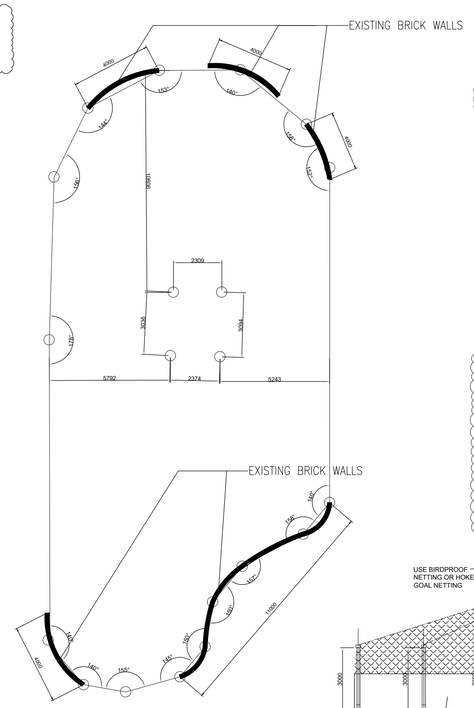

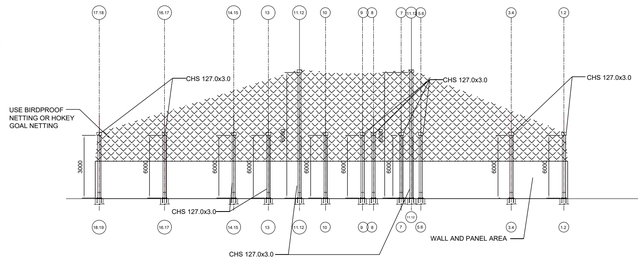

SECTION B

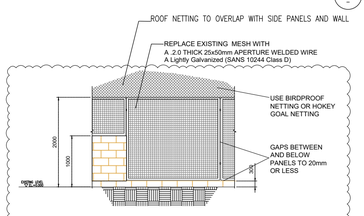

GENERAL ELEVATION ON PANELS AND BRICKWORK

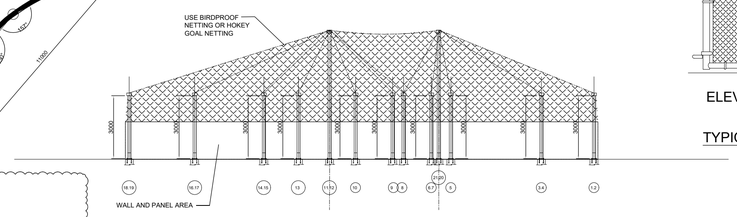

ELEVATION VIEW

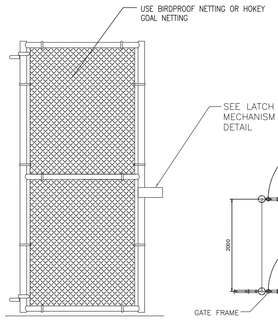

ELEVATION VIEW

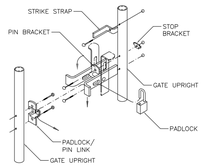

FULCRUM LATCH
SCALE: NTS

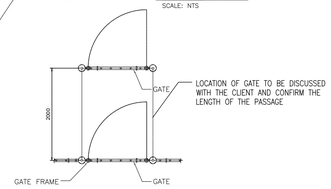

PLAN

TYPICAL ELEVATION AND PLAN ON THE DOUBLE GATE SYSTEM

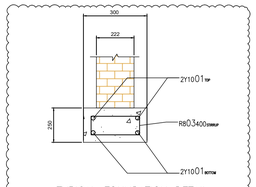

TYPICAL FOUNDATION DETAIL

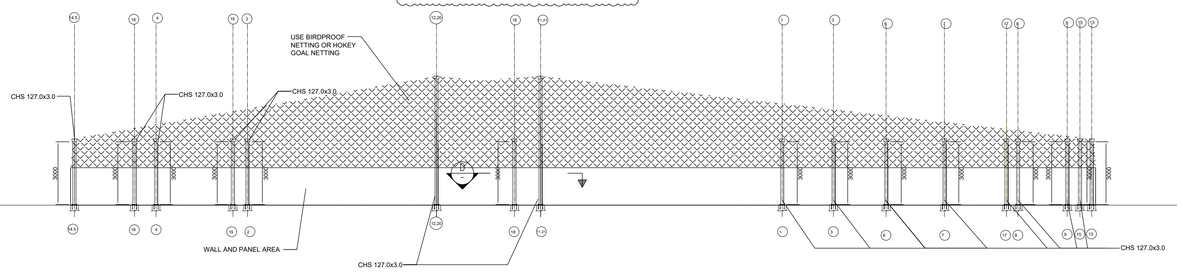

SECTION A

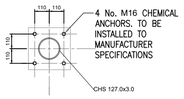

PLAN ON BASE PLATE TYPE
20 PLACES

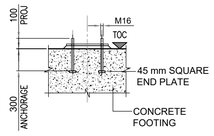

CROSS SECION

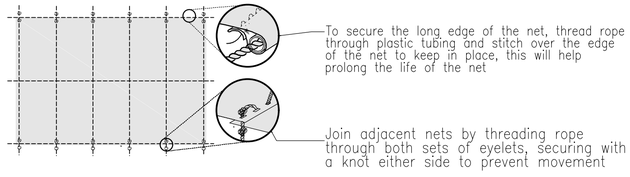

SUGGESTED METHOD OF JOINING THE NETTING

NOTES

- All steelwork to be fabricated to SANS 2001-CS11:2012, must comply with SANS 1921-3 and the project specifications.
- Drilled holes for bolted connections shall have a the bolt diameter U.N.O minimum of 2mm larger than (Unless Noted Otherwise).
- Heavy duty washers shall be provided provided for all oversized overhead and slotted holes
- Min edge distances for connections shall be in accordance with SANS 10162 U.N.O
- All bolts shall be IOS bolts of class 8.8 in accordance with SANS 1700-5-1
- All welds and preparations to be specified and executed in accordance with AWS D1.1
- All but welds to develop the full strength the sections being jointed
- All fillet weld shall be 6mm (min) and shall be sealed and impervious U.N.O
- No field welds be permissible unless prior approval is obtained from the engineer.
- For approved full penetration filed welds, backing plates shall be used. Take weld backing plate to appropriate member shipment U.N.O.
- All welded surfaces preparations shall be discussed, inspected and approved by the engineer in conjunction with the SANS, or other approved inspection agency.
- All open ends of hollow sections shall be sealed with 3mm plate U.N.O.
- All relevant concrete and steel dimensions shall be checked on site before manufacture of structural steel commences.

FOUNDATION

- Unsuitable material below foundations to be removed as directed by the engineer, and replaced with backfill backfill in accordance with the specification and engineer's instructions.
- The contractor is to confirm all dimensions and levels on site and report any discrepancies to the engineer immediately.
- A minimum notice of 48 hours is required for inspection prior to casting concrete

COPYRIGHT

This document is the property of SANBI. Use or copying of the document in whole or in part without written permission of SANBI constitute infringement

STRUCTURAL CALCULATION FILE NO. XXX N/A

DESIGNED & APPROVED IN ACCORDANCE WITH S.A.N.S. 10111 ENGINEERING DRAWINGS

MINE - NOTED	NAME	DATE	SIGNATURE
STRUCTURAL ENGINEER			
ENGINEERING MANAGER			
PROJECT ENGINEER			
PROCESS MANAGER			
SECTION ENGINEER			
CONSTR. MANAGER			

CONSULTANT:
JENDZA CAPITAL

JENDZA CAPITAL
6 Bates House, Tybalt Place,
Waterfall Office Park,
Bekker Street, Vorna Valley,
Midrand
Tel. 010 824 1360
Fax. 086 549 2686

CLIENT:
SANBI Biodiversity for Life
South African National Biodiversity Institute

SOUTH AFRICAN NATIONAL BIODIVERSITY (SANBI)
NATIONAL ZOOLOGICAL GARDENS
232 BOOM ST, DASPOORT 319-JR, PRETORIA

PROJECT NAME:
SANBI NZG BIOSECURITY MEASURES AND RENOVATIONS TO MAMMAL ENCLOSURES

DRAWING TITLE:
DUCK POND ENCLOSURE CONCEPT

REVISION TABLE

NO.	DATE	DESCRIPTION
1	20 August 2021	SPECS AND TYPE OF NETTING

DRW NO: G360/2020-STR-DRW-0016

PROJECT NO:	SCALE	SHEET NO:	REV:
G360/2020	N.T.S	1 OF 1	2

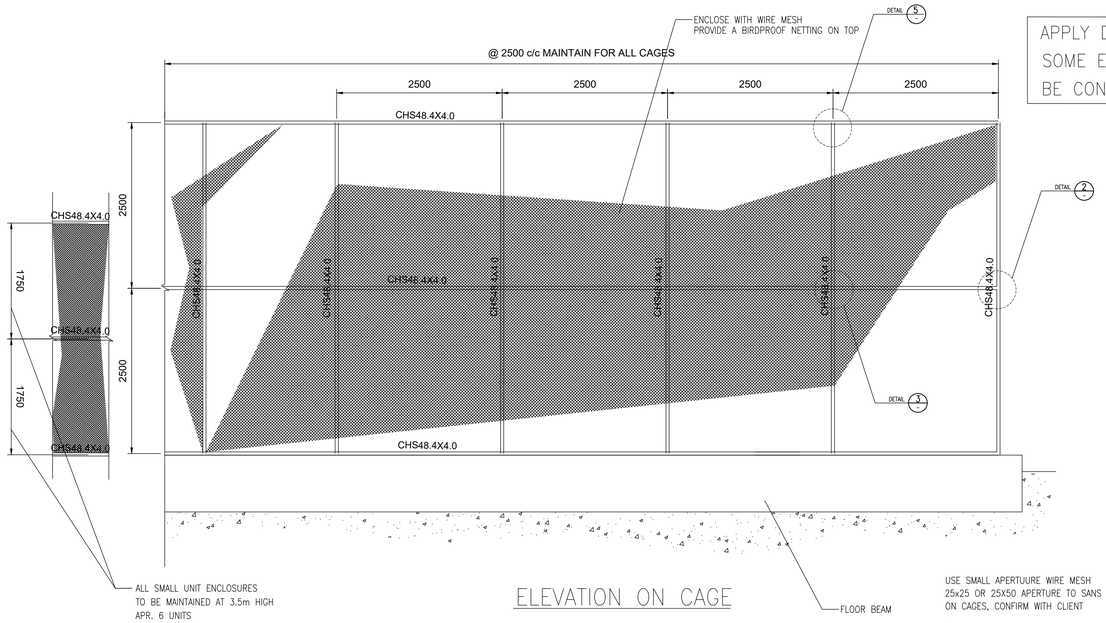

ELEVATION ON CAGE

APPLY DETAIL ON DRAWING TO 3 CAGES, CONFIRM WITH CLIENT SOME ENCLOSURES REQUIRE TO BE JOINED, THIS WILL NEED TO BE CONFIRMED WITH THE CLIENT.

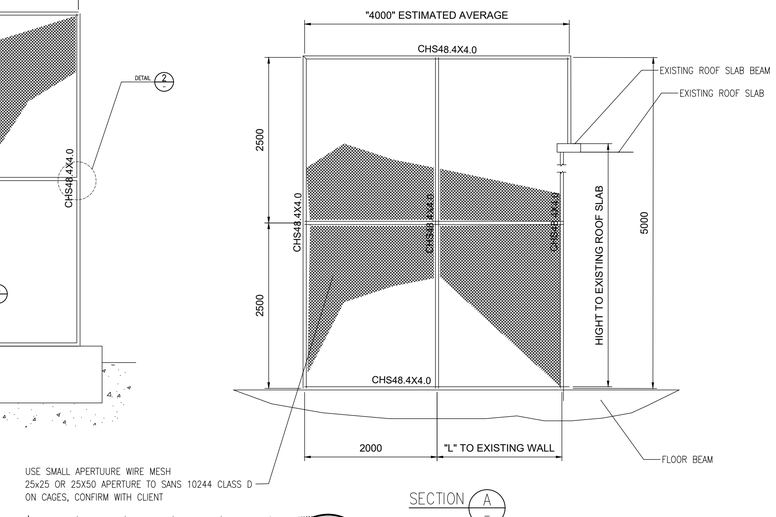

SECTION A

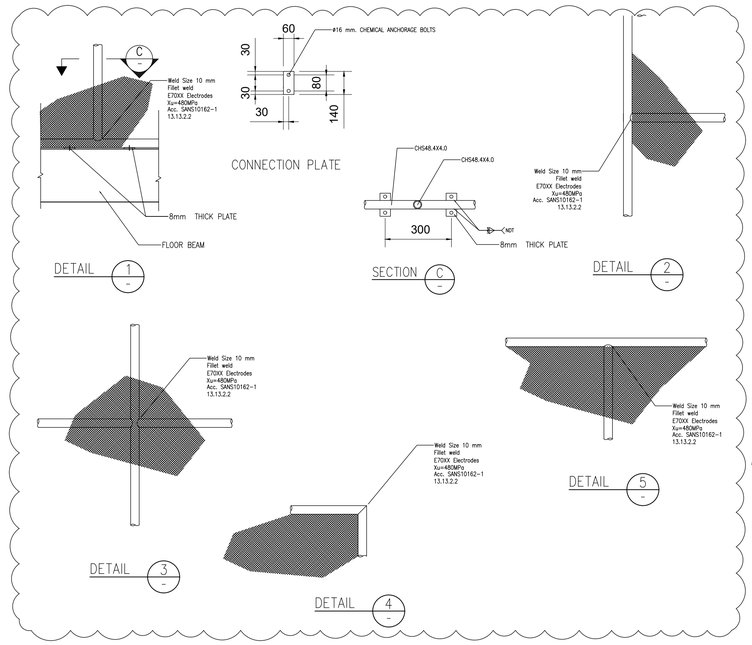

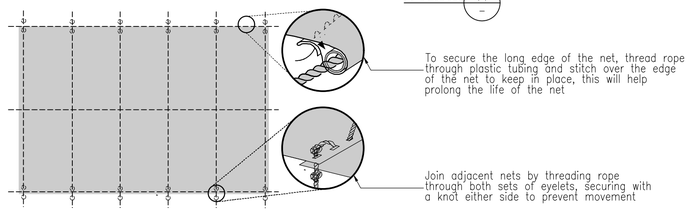

SUGGESTED METHOD OF JOINING THE NETTING

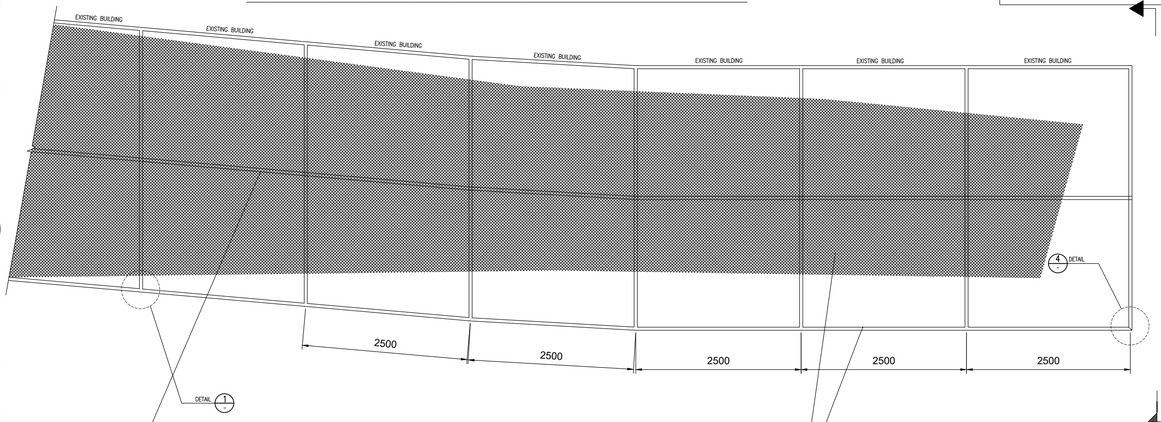

PLAN ON CAGE

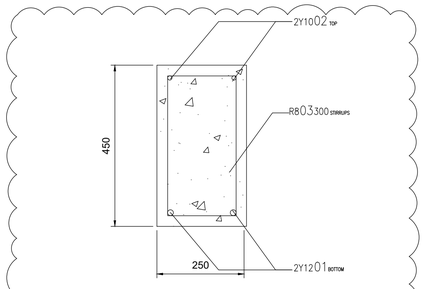

A

CROSS-SECTION ON FLOOR BEAM

NOTES

- All steelwork to be fabriacted to SANS 2001-CSI1:2012, must comply with SANS 1921-3 and the project specifications.
- Drilled holes for bolted connections shall have a minimum of 2mm larger than the bolt diameter U.N.O (Unless Noted Otherwise).
- Heavy duty washers shall be provided provided for all oversized overhead and slotted holes
- Min edge distances for connections shall be in accordance with SANS 10162 U.N.O (Unless Noted Otherwise).
- All bolts shall be IOS bolts of class 8.8 in accordance with SANS 1700-5-1
- All welds and preperations to be specified and executed in accordance with AWS D1.1 .
- All but welds to develope the full strength the sections being jointed
- All fillet weld shall be 6mm (min) and shall be sealed and impervious U.N.O
- No field welds be permissible unless prior approval is obtained from the engineer. For approved full penetration filed welds, backing plates shall be used. Take weld backing plate to appropriate member shipment U.N.O.
- All welded surfaces preparations shall be discussed, inspected and approved by the engineer in conjunction with the SANS, or other approved inspection agency.
- All open ends of hollow sections shall be sealed with 3mm plate U.N.O.
- All relevant concrete and steel dimensions shall be checked on site before manufacture of structural steel commences.

FOUNDATION

- Unsuitable material below foundations to be removed as directed by the engineer , and replaced with backfill in accordance with the specification and engineer's instructions.
- The contractor is to confirm all dimensions and levels on site and report any discripancies to the engineer immediately.

A minimum notice of 48 hours is required for inspection prior to casting concrete

CLIENTS REQUIREMENT IS TO REPLACE EXISTING WIRE MESH WITH A MIM 4mm 20x20 DIAMOND OR 30x20 WELDED WIRE MESH ALTERNATIVELY REPLACE WITH A 2.0 THICK 25x50mm APERTURE WELDED WIRE MESH Lightly Galvanized (SANS 10244 Class D)

REPAIR/DAMAGED STRUCTURAL MEMBERS. SAND DOWN AND APPLY CORROSION PROTECTION. PAINT MATT BLACK. ALL WIRE TO BE POWDER COATED OR PVC COATED.

COPYRIGHT

This document is the property of SANBI. Use or copying of the document in whole or in part without written permission of SANBI constitute infringement

STRUCTURAL CALCULATION FILE NO. XXX N/A

DESIGNED & APPROVED IN ACCORDANCE WITH S.A.N.S. 10111 ENGINEERING DRAWINGS

MINE - NOTED	NAME	DATE	SIGNATURE
STRUCTURAL ENGINEER			
ENGINEERING MANAGER			
PROJECT ENGINEER			
PROCESS MANAGER			
SECTION ENGINEER			
CONSTR. MANAGER			

CONSULTANT:
JENDZA CAPITAL.
JENDZA CAPITAL
6 Bates House, Tybalt Place,
Waterfall Office Park,
Bekker Street, Vorna Valley,
Midrand
Tel. 010 824 1360
Fax. 086 549 2686

CLIENT:
SANBI
Biodiversity for Life
South African National Biodiversity Institute
SOUTH AFRICAN NATIONAL BIODIVERSITY (SANBI)
NATIONAL ZOOLOGICAL GARDENS
232 BOOM ST, DASPOORT 319-JR, PRETORIA

PROJECT NAME:
SANBI NZG BIOSECURITY MEASURES AND RENOVATIONS TO MAMMAL ENCLOSURES

DRAWING TITLE:
RAPTOR ROWS

REVISION TABLE

NO.	DATE	DESCRIPTION
1	20 August 2021	MESH AND NET SPECS

DRW NO: G360/2020-STR-DRW-0015

PROJECT NO:	SCALE	SHEET NO:	REV:
G360/2020	N.T.S	1 OF 1	1

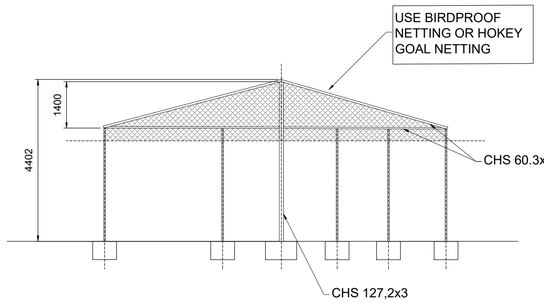

SECTION B

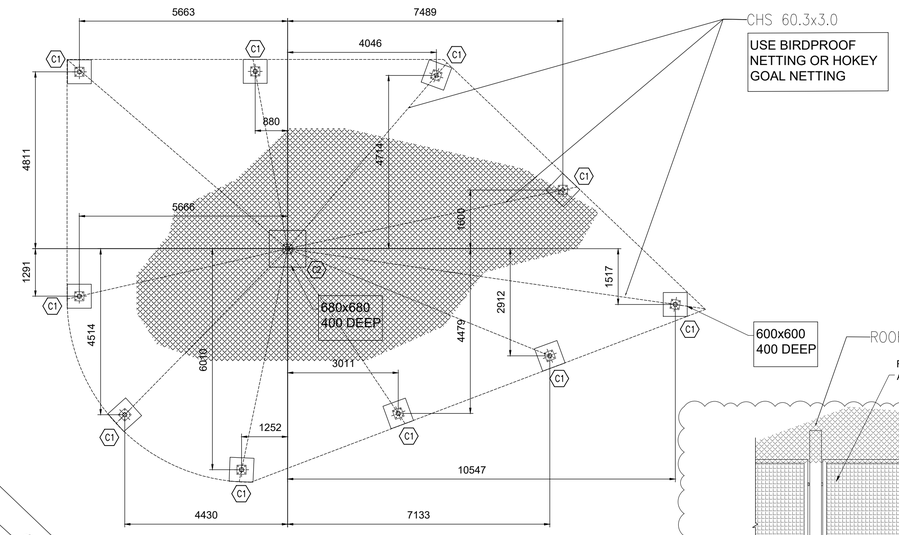

PLAN ON BASE PLATE

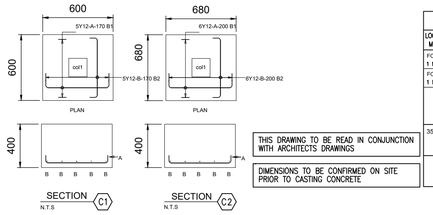

THIS DRAWING TO BE READ IN CONJUNCTION WITH ARCHITECTS DRAWINGS

DIMENSIONS TO BE CONFIRMED ON SITE PRIOR TO CASTING CONCRETE

BENDING SCHEDULE

LOCATION/ MEMBER	BAR MARK	TYPE & SIZE	NO. IN EACH	TOTAL No.	CUTTING LENGTH	TOTAL LENGTH	SHAPE CODE	BENDING DIMENSIONS TO SABS 82 A	B	C	D	E/R
FOOTING C1	A	Y12	4	40	700	28.0 m	35	520				
1 No. OFF 10	B	Y12	4	40	700	28.0 m	35	520				
FOOTING C2	A	Y12	4	6	800	4.8 m	35	600				
1 No. OFF 1	B	Y12	4	6	800	4.8 m	35	600				

35

MASSES

DIA	8	10	12	16	20
Y			58.26		
R					

Deformed High Tensile Bars To
Y = SABS 935 Type 2 Class 2 Grade 1
R = Round Mild Steel Bars To SABS 1
R = Round Mild Steel bars To SABS 920
M = Welded Mesh Fabric Number M
Accordance With SABS 1024

Cover:
Bot:30 mm
Sides:40 mm

REINFORCEMENT ABBREVIATIONS:

EW	=	EACH WAY.	TF	=	TOP FACE
EF	=	EACH FACE	CF	=	CENTER FACE
FF	=	FAR FACE	BF	=	BOTTOM FACE
NF	=	NEAR FACE	B2	=	BOTTOM TWO
ALT	=	ALTERNATE	OF	=	OUTSIDE FACE
STG	=	STAGGERED	IF	=	INSIDE FACE
ADR	=	ALTERNATE BARS REVERSED			

BARS TO BE LAPPED MINIMUM 50 x BAR DIAMETER WHEN REQUIRED.
COVER TO REINFORCEMENT TO BE 50mm U.O.N.

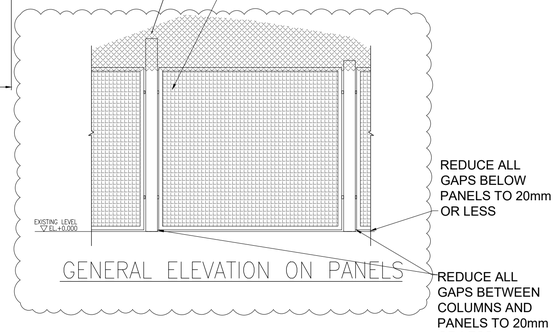

GENERAL ELEVATION ON PANELS

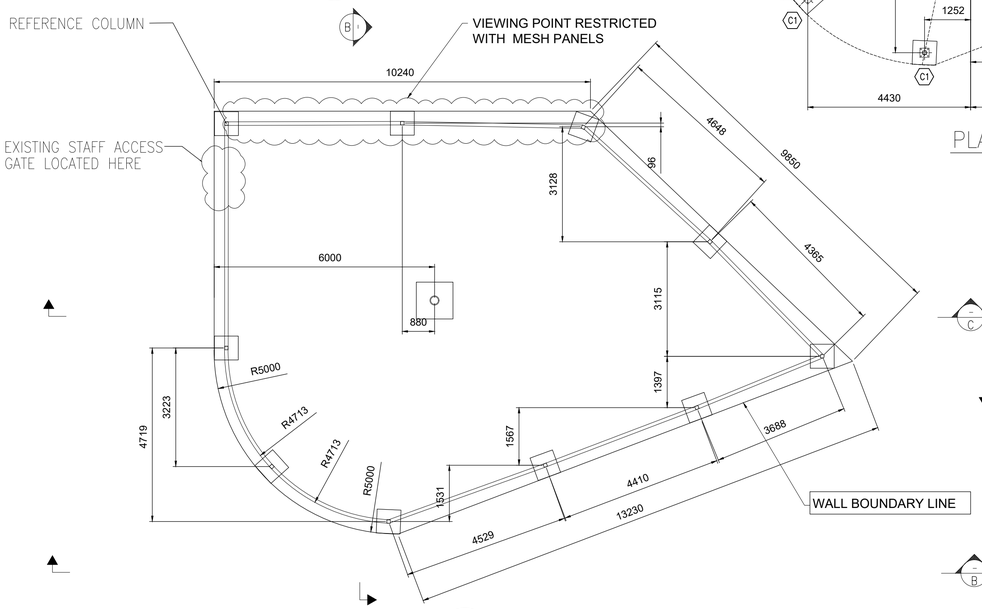

A SECTION

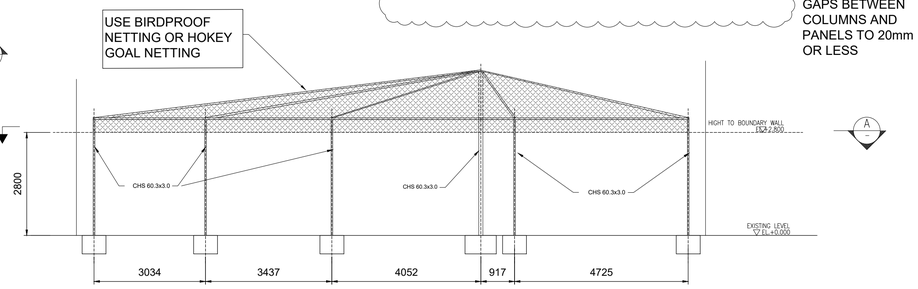

PLAN VIEW

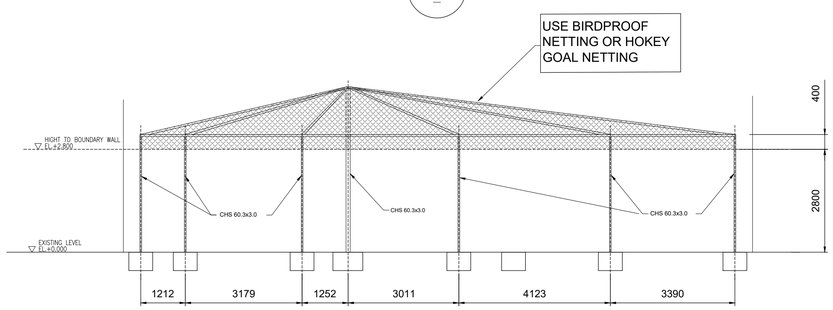

SECTION C

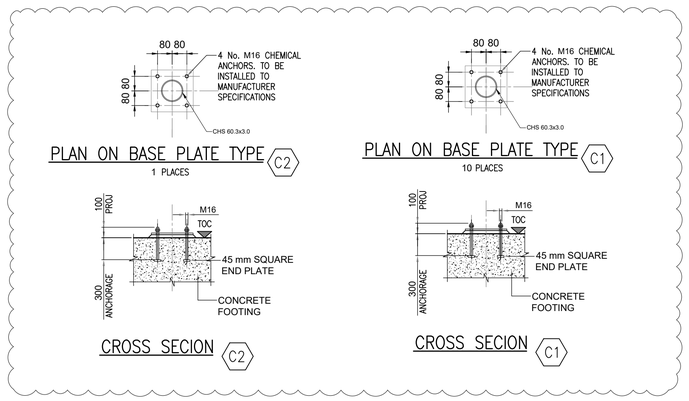

NOTES

- All steelwork to be fabricated to SANS 2001-CS11:2012, must comply with SANS 1921-3 and the project specifications.
- Drilled holes for bolted connections shall have a the bolt diameter U.N.O minimum of 2mm larger than (Unless Noted Otherwise).
- Heavy duty washers shall be provided provided for all oversized overhead and slotted holes
- Min edge distances for connections shall be in accordance with SANS 10162 U.N.O
- All bolts shall be IOS bolts of class 8.8 in accordance with SANS 1700-5-1
- All welds and preparations to be specified and executed in accordance with AWS D1.1
- All but welds to develop the full strength the sections being jointed
- All fillet weld shall be 6mm (min) and shall be sealed and impervious U.N.O
- No field welds be permissible unless prior approval is obtained from the engineer.
- For approved full penetration filed welds, backing plates shall be used. Take weld backing plate to appropriate member shipment U.N.O.
- All welded surfaces preparations shall be discussed, inspected and approved by the engineer in conjunction with the SANS, or other approved inspection agency.
- All open ends of hollow sections shall be sealed with 3mm plate U.N.O.
- All relevant concrete and steel dimensions shall be checked on site before manufacture of structural steel commences.

FOUNDATION

- Unsuitable material below foundations to be removed as directed by the engineer, and replaced with backfill backfill in accordance with the specification and engineer's instructions.
- The contractor is to confirm all dimensions and levels on site and report any discrepancies to the engineer immediately.
- A minimum notice of 48 hours is required for inspection prior to casting concrete

COPYRIGHT

This document is the property of SANBI. Use or copying of the document in whole or in part without written permission of SANBI constitute infringement

STRUCTURAL CALCULATION FILE NO. XXX N/A

DESIGNED & APPROVED IN ACCORDANCE WITH S.A.N.S. 10111 ENGINEERING DRAWINGS

MINE - NOTED	NAME	DATE	SIGNATURE
STRUCTURAL ENGINEER			
ENGINEERING MANAGER			
PROJECT ENGINEER			
PROCESS MANAGER			
SECTION ENGINEER			
CONSTR. MANAGER			

CONSULTANT:
JENDZA CAPITAL.
JENDZA CAPITAL
6 Bates House, Tybalt Place,
Waterfall Office Park,
Bekker Street, Vorna Valley,
Midrand
Tel. 010 824 1360
Fax. 086 549 2686

CLIENT:
SANBI Biodiversity for Life
South African National Biodiversity Institute
SOUTH AFRICAN NATIONAL BIODIVERSITY (SANBI)
NATIONAL ZOOLOGICAL GARDENS
232 BOOM ST, DASPOORT 319-JR, PRETORIA

PROJECT NAME:
SANBI NZG BIOSECURITY MEASURES AND RENOVATIONS TO MAMMAL ENCLOSURES

DRAWING TITLE:
CHICKEN ROW ROOF OVER AND ENCLOSURE

REVISION TABLE

NO.	DATE	DESCRIPTION
1	20 August 2021	ADDITIONAL DIMENSIONS AND SPECS

DRW NO: G360/2020-STR-DRAW-0017

PROJECT NO:	SCALE	SHEET NO:	REV:
G360/2020	1:300	1 OF 1	1

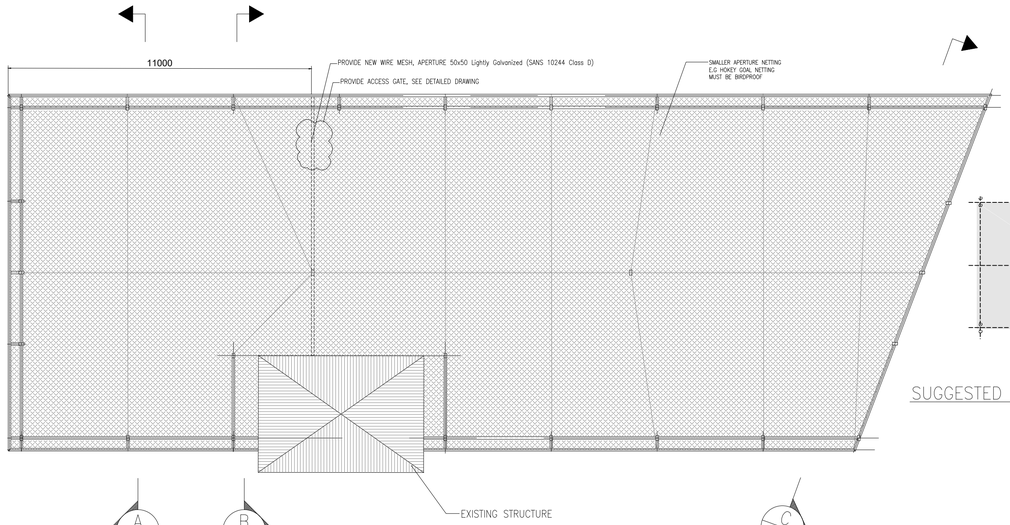

PLAN ON ENCLOSURE

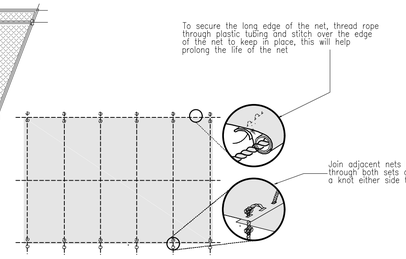

SUGGESTED METHOD OF JOINING THE NETTING

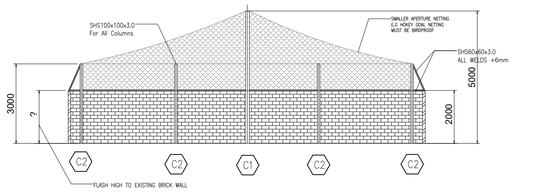

SECTION A

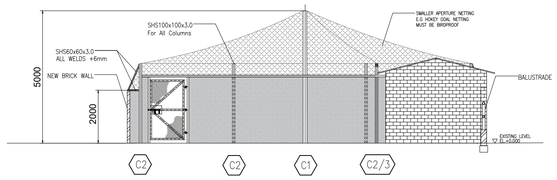

SECTION B

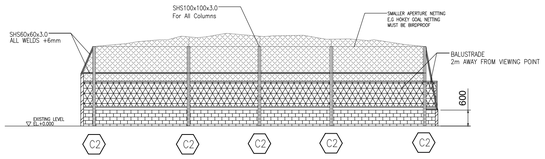

SECTION C

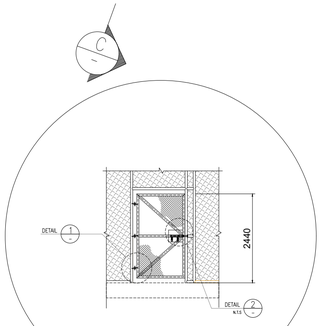

ELEVATION ON GATE

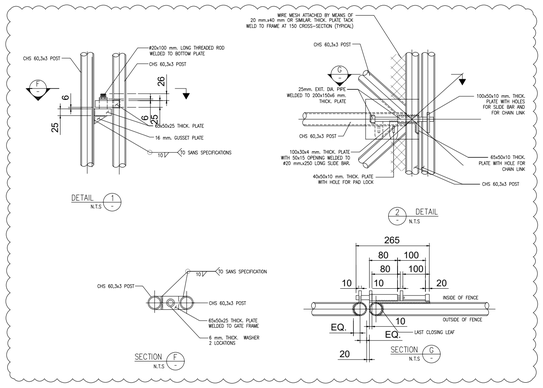

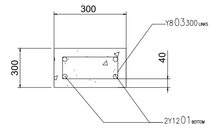

CROSS-SECTION ON FLOOR BEAM
N.T.S

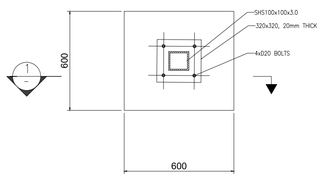

PLAN ON BASE PLATE C2

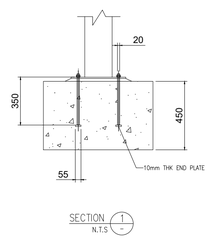

SECTION 1 N.T.S

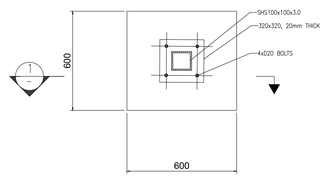

PLAN ON BASE PLATE C1

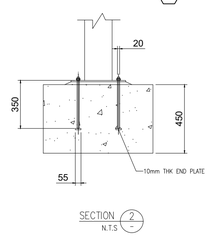

SECTION 2 N.T.S

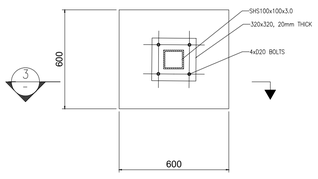

PLAN ON BASE PLATE C3

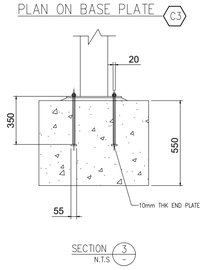

SECTION 3 N.T.S

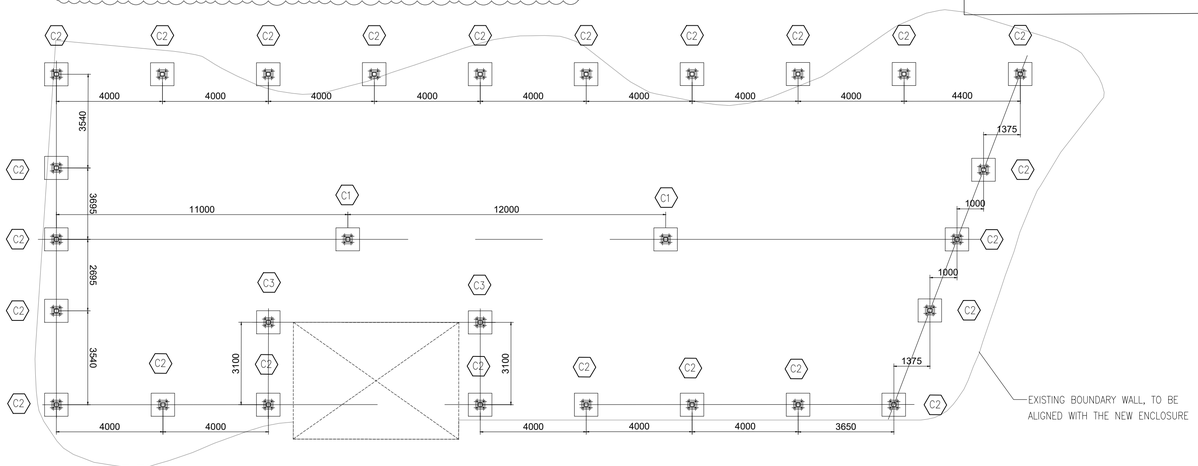

PLAN ON BASE PLATES

NOTES

- All steelwork to be fabricated to SANS 2001-CSI1:2012, must comply with SANS 1921-3 and the project specifications.
- Drilled holes for bolted connections shall have a the bolt diameter U.N.O minimum of 2mm larger than (Unless Noted Otherwise).
- Heavy duty washers shall be provided provided for all oversized overhead and slotted holes
- Min edge distances for connections shall be in accordance with SANS 10162 U.N.O
- All bolts shall be IOS bolts of class 8.8 in accordance with SANS 1700-5-1
- All welds and preparations to be specified and executed in accordance with AWS D1.1
- All but welds to develop the full strength the sections being jointed
- All fillet weld shall be 6mm (min) and shall be sealed and impervious U.N.O
- No field welds be permissible unless prior approval is obtained from the engineer.
- For approved full penetration filed welds, backing plates shall be used. Take weld backing plate to appropriate member shipment U.N.O.
- All welded surfaces preparations shall be discussed, inspected and approved by the engineer in conjunction with the SANS, or other approved inspection agency.
- All open ends of hollow sections shall be sealed with 3mm plate U.N.O.
- All relevant concrete and steel dimensions shall be checked on site before manufacture of structural steel commences.

FOUNDATION

- Unsuitable material below foundations to be removed as directed by the engineer, and replaced with backfill backfill in accordance with the specification and engineer's instructions.
- The contractor is to confirm all dimensions and levels on site and report any discrepancies to the engineer immediately.
- A minimum notice of 48 hours is required for inspection prior to casting concrete

COPYRIGHT

This document is the property of SANBI. Use or copying of the document in whole or in part without written permission of SANBI constitute infringement

STRUCTURAL CALCULATION FILE NO. XXX N/A

DESIGNED & APPROVED IN ACCORDANCE WITH S.A.N.S. 10111 ENGINEERING DRAWINGS

MINE - NOTED	NAME	DATE	SIGNATURE
STRUCTURAL ENGINEER			
ENGINEERING MANAGER			
PROJECT ENGINEER			
PROCESS MANAGER			
SECTION ENGINEER			
CONSTR. MANAGER			

CONSULTANT:
JENDZA CAPITAL.
JENDZA CAPITAL
6 Bates House, Tybalt Place,
Waterfall Office Park,
Bekker Street, Vorna Valley,
Midrand
Tel. 010 824 1360
Fax. 086 549 2686

CLIENT:
SANBI Biodiversity for Life
South African National Biodiversity Institute
SOUTH AFRICAN NATIONAL BIODIVERSITY (SANBI)
NATIONAL ZOOLOGICAL GARDENS
232 BOOM ST, DASPOORT 319-JR, PRETORIA

PROJECT NAME:
SANBI NZG BIOSECURITY MEASURES AND RENOVATIONS TO MAMMAL ENCLOSURES

DRAWING TITLE:
NEW CRANE CAMP ROOF AND ENCLOSURE

REVISION TABLE

NO.	DATE	DESCRIPTION
1	20 August 2021	NET SPECIFICATION
2	27 August 2021	SECTIONS AND FOUNDATIONS

DRW NO: G360/2020-STR-DRW0005

PROJECT NO:	SCALE	SHEET NO:	REV:
G360/2020	1:400	1 OF 1	2

GENERAL ARRANGEMENTS DRAWINGS WITH SPECIFICATIONS

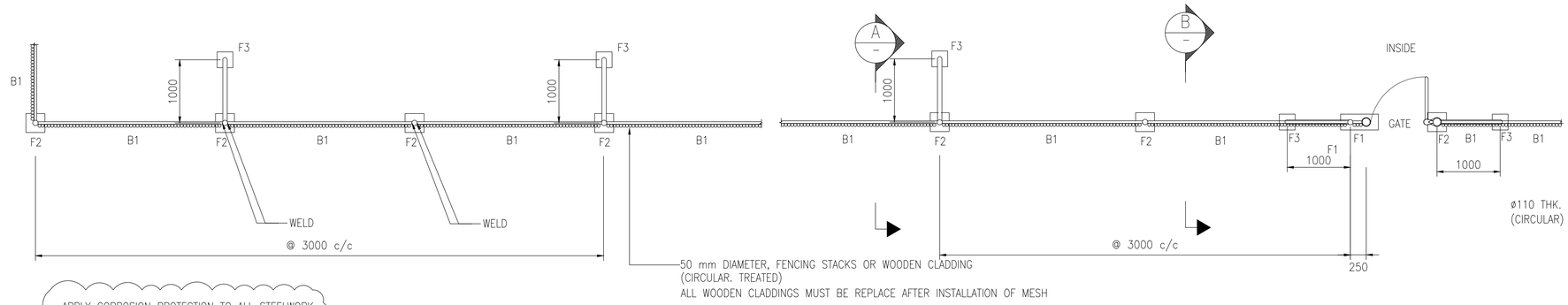

APPLY CORROSION PROTECTION TO ALL STEELWORK

TYPICAL FENCE PLAN

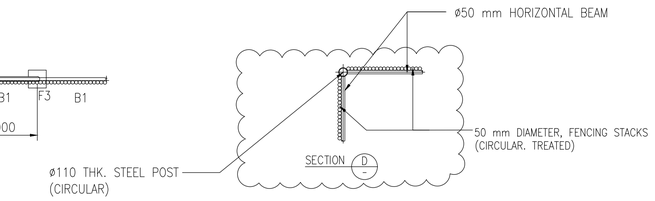

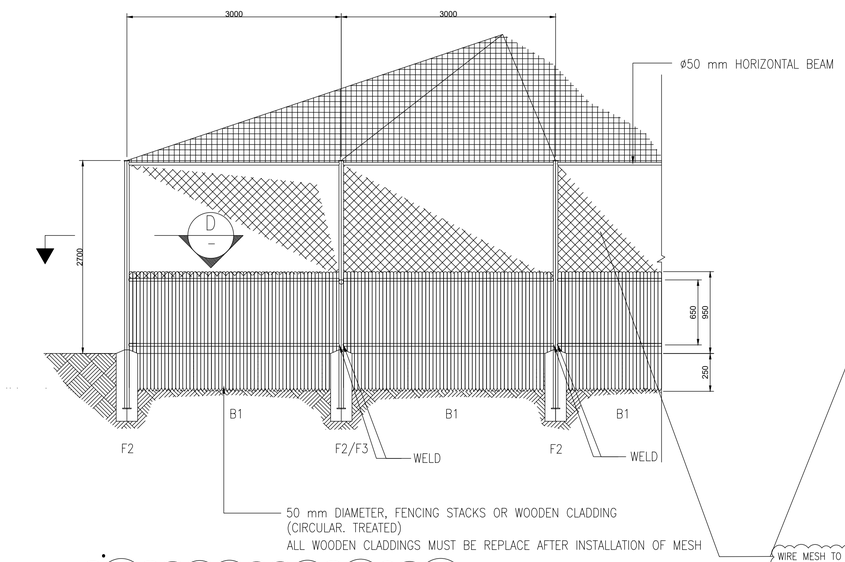

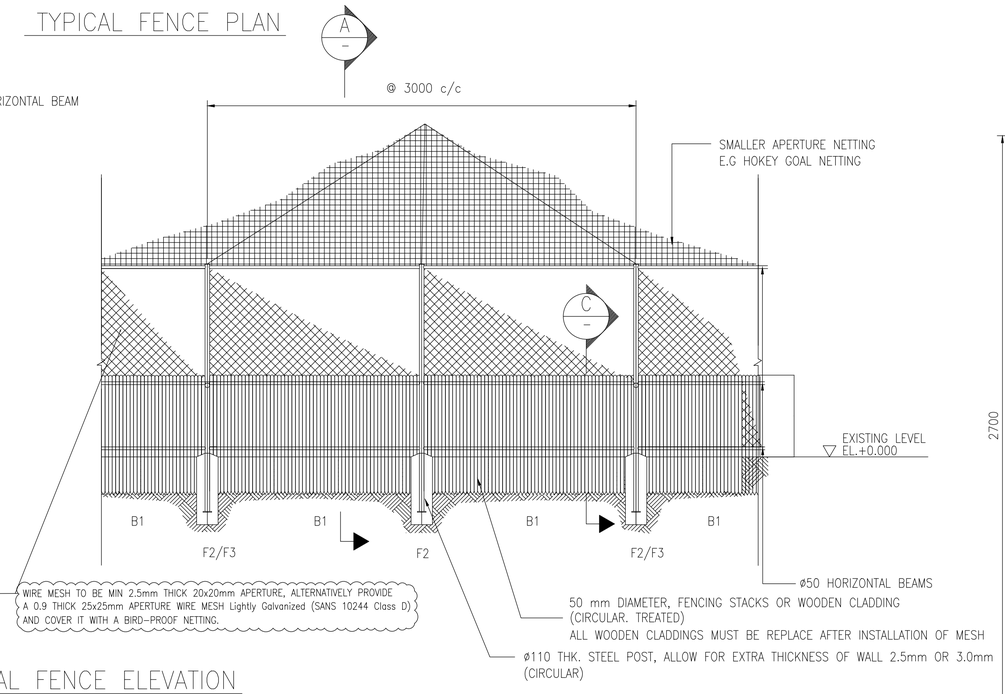

TYPICAL FENCE ELEVATION

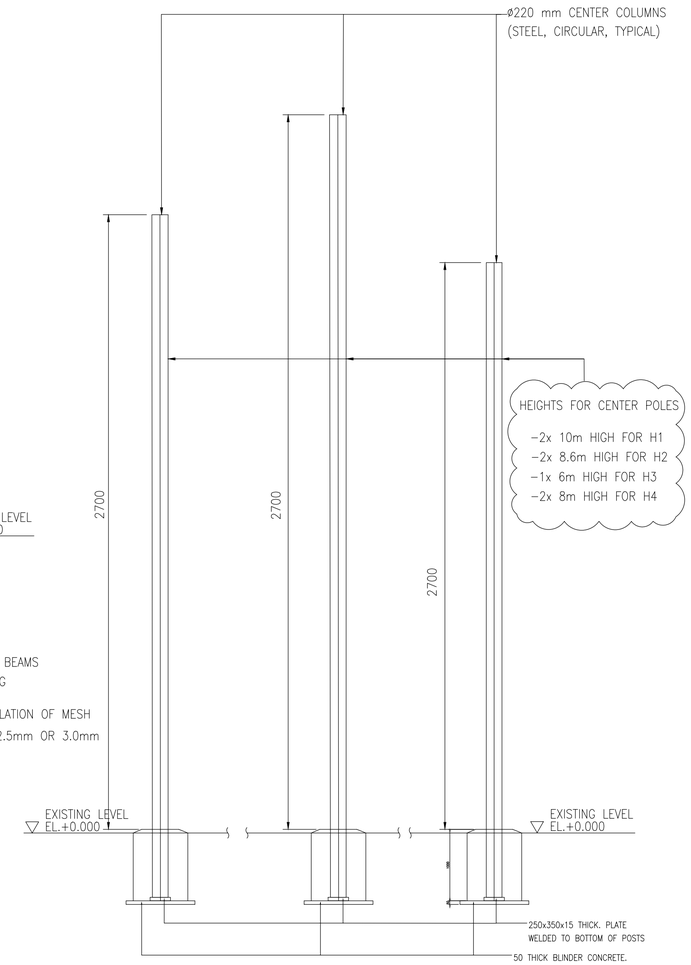

ALTERNATIVELY NETTING CLIPS CAN BE USED INSTEAD OF BREADS

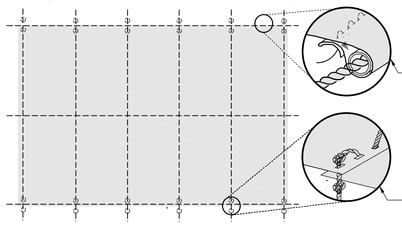

To secure the long edge of the net, thread rope through plastic tubing and stitch over the edge of the net to keep in place, this will help prolong the life of the net

Join adjacent nets by threading rope through both sets of eyelets, securing with a knot either side to prevent movement

SUGGESTED METHOD OF JOINING THE NETTING

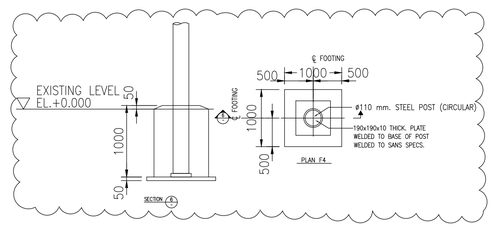

COPYRIGHT

This document is the property of SANBI.
Use or copying of the document in whole or in part without written permission of SANBI constitute infringement

STRUCTURAL CALCULATION FILE NO. XXX N/A

DESIGNED & APPROVED IN ACCORDANCE WITH S.A.N.S. 10111 ENGINEERING DRAWINGS

MINE - NOTED	NAME	DATE	SIGNATURE
STRUCTURAL ENGINEER	K KANKU	July 2021	
ENGINEERING MANAGER			
PROJECT ENGINEER			
PROCESS MANAGER			
SECTION ENGINEER			
CONSTR. MANAGER			

CONSULTANT:
JENDZA CAPITAL.
JENDZA CAPITAL
6 Bates House, Tybalt Place,
Waterfall Office Park,
Bekker Street, Vorna Valley,
Midrand
Tel. 010 824 1360
Fax. 086 549 2686

CLIENT:
SANBI
Biodiversity for Life
South African National Biodiversity Institute
SOUTH AFRICAN NATIONAL BIODIVERSITY (SANBI)
NATIONAL ZOOLOGICAL GARDENS
232 BOOM ST, DASPOORT 319-JR, PRETORIA

PROJECT NAME:
SANBI NZG BIOSECURITY MEASURES AND RENOVATIONS TO MAMMAL ENCLOSURES

DRAWING TITLE:
GROUND HORNBILLS, H1, H2, H3 & H4 ENCLOSURES

REVISION TABLE

NO.	DATE	DESCRIPTION

DRW NO: G360/2020-STR-DRW-0002

PROJECT NO:	SCALE	SHEET NO:	REV:
G360/2020	N.T.S	2 OF 2	1

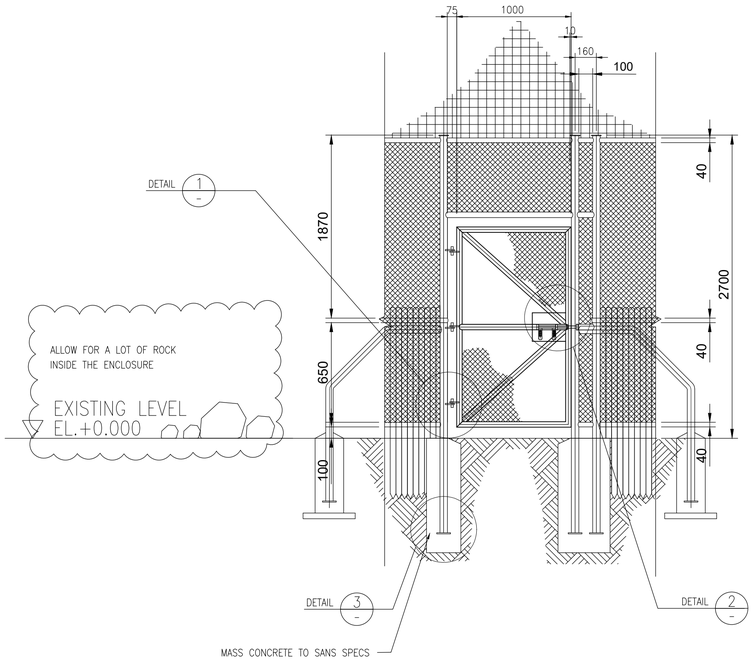

ELEVATION ON GATE

FROM INSIDE

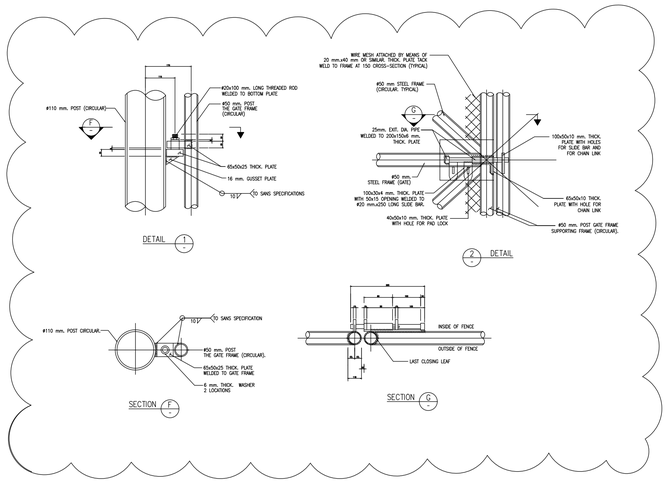

NOTES

- All steelwork to be fabriacted to SANS 2001-CSI1:2012, must comply with SANS 1921-3 and the project specifications.
- Drilled holes for bolted connections shall have a minimum of 2mm larger than the bolt diameter U.N.O (Unless Noted Otherwise).
- Heavy duty washers shall be provided provided for all oversized overhead and slotted holes
- Min edge distances for connections shall be in accordance with SANS 10162 U.N.O (Unless Noted Otherwise).
- All bolts shall be IOS bolts of class 8.8 in accordance with SANS 1700-5-1
- All welds and preperations to be specified and executed in accordance with AWS D1.1
- All but welds to develope the full strength the sections being jointed
- All fillet weld shall be 6mm (min) and shall be sealed and impervious U.N.O
- No field welds be permissible unless prior approval is obtained from the engineer. For approved full penetration filed welds, backing plates shall be used. Take weld backing plate to appropriate member shipment U.N.O.
- All welded surfaces preperations shall be discussed, inspected and approved by the engineer in conjunction with the SANS, or other approved inspection agency.
- All open ends of hollow sections shall be sealed with 3mm plate U.N.O.
- All relevant concrete and steel dimensions shall be checked on site before manufacture of structural steel commences.

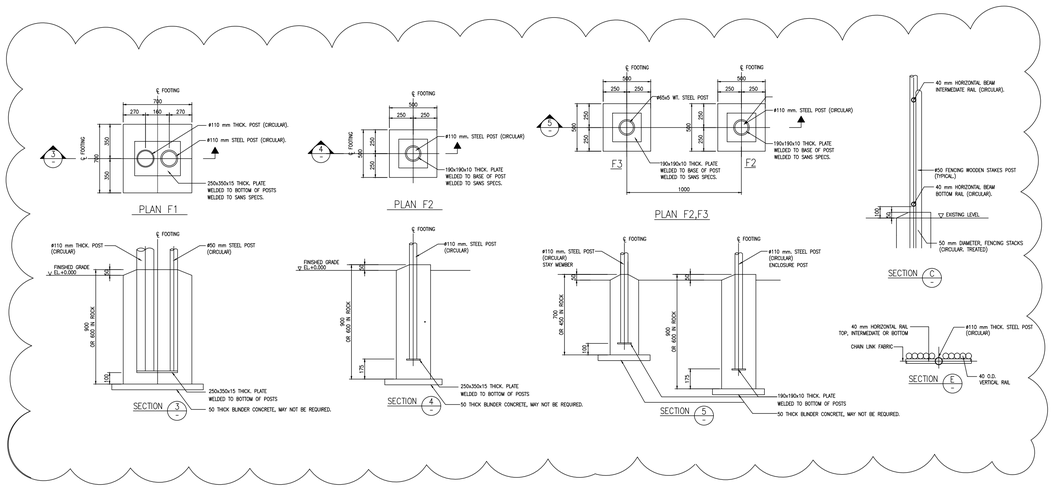

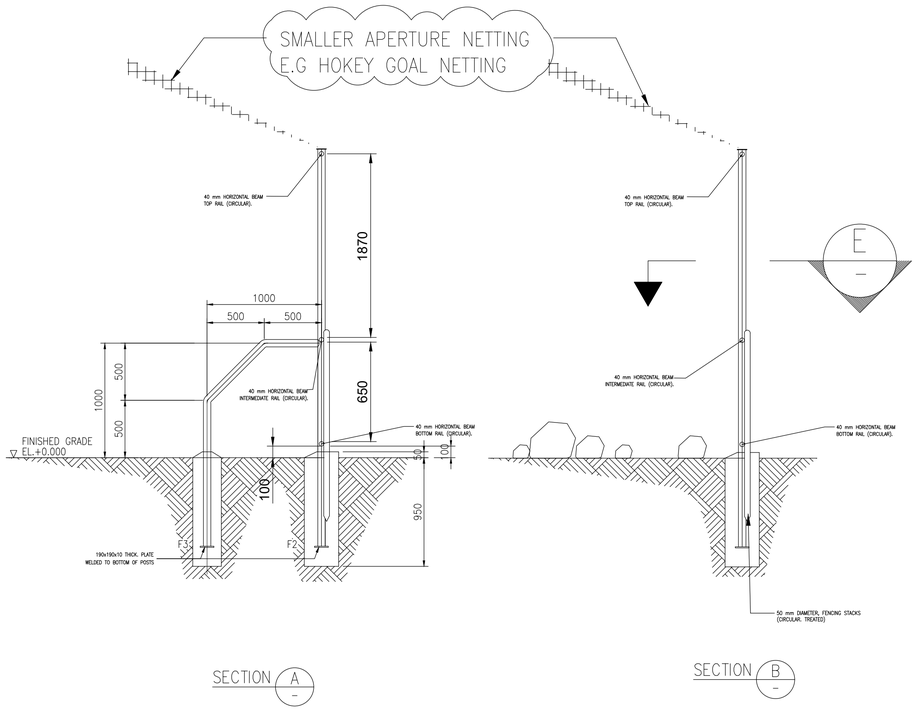

SECTION A

SECTION B

COPYRIGHT

This document is the property of SANBI. Use or copying of the document in whole or in part without written permission of SANBI constitute infringement

STRUCTURAL CALCULATION FILE NO. XXX N/A

DESIGNED & APPROVED IN ACCORDANCE WITH S.A.N.S. 10111 ENGINEERING DRAWINGS

MINE - NOTED	NAME	DATE	SIGNATURE
STRUCTURAL ENGINEER	K KANKU	July 2021	
ENGINEERING MANAGER			
PROJECT ENGINEER			
PROCESS MANAGER			
SECTION ENGINEER			
CONSTR. MANAGER			

CONSULTANT:

JENDZA CAPITAL

JENDZA CAPITAL
6 Bates House, Tybalt Place,
Waterfall Office Park,
Bekker Street, Vorna Valley,
Midrand
Tel. 010 824 1360
Fax. 086 549 2686

CLIENT:

SANBI Biodiversity for Life
South African National Biodiversity Institute

SOUTH AFRICAN NATIONAL BIODIVERSITY (SANBI)
NATIONAL ZOOLOGICAL GARDENS
232 BOOM ST, DASPOORT 319-JR, PRETORIA

PROJECT NAME:
SANBI NZG BIOSECURITY MEASURES AND RENOVATIONS TO MAMMAL ENCLOSURES

DRAWING TITLE:
GROUND HORNBILLS, H1, H2, H3 & H4 ENCLOSURES

REVISION TABLE

NO.	DATE	DESCRIPTION

DRW NO: G360/2020-STR-DRW-0002

PROJECT NO:	SCALE	SHEET NO:	REV:
G360/2020	N.T.S	2 OF 2	1

SPECIFICATIONS DOCUMENTS ONLY

AUSTRALIAN BIRDS DETAILED SPECIFICATION

The following specifications were considered suitable for the enclosure.

Table 1: Specification provisions

SPECIFICATION FOR PARROT ROW WIREMESH						
REQUIREMENT	PURPOSE	SANS	STEEL STRENGTH	ZINK COATING	MIN DIAMETER	REMARKS
Replacement of fence with small aperture fence	Prevent visitors feeding parrots and other birds from entering the enclosure.	SANS 10244	Mild steel (Lightly Galvanised)	Class D	1.6 mm	Welded wire mesh with 13x25 mm opening
			Mild steel (Lightly Galvanised)	Class D	2.0 mm	Welded wire mesh with 25x50 mm opening
Permanent Replacement of top roof cover with smaller aperture	Keep other birds out of the enclosure.	SANS 10244	Mild steel (Lightly Galvanised)	Class D	1.6 mm	Welded wire mesh with 13x25 mm opening
			Mild steel (Lightly Galvanised)	Class D	2.0 mm	Welded wire mesh with 25x50 mm opening
Providing moveable shade net cover	Extra protection to Prevent bird droppings from entering parrots' row during periods of high dropping	---	---	---	---	Shade netting
Painting and repair of steel structure	Corrosion Prevention	---	---	---	---	All steel mesh to be coated with PVC/powder coat

						prior to installation (mat black colour, must be zoo friendly).
	Corrosion Prevention	---	---	---	---	Repair or replace all damaged steel members, sand, and apply corrosion protection (mat black paint, must be zoo friendly)

Notes:

Reinstate all area post repairs/construction.

CONFISCATED PARROT ROW DETAILED SPECIFICATION

The following specifications were considered suitable for the enclosure.

Table 1: Specification provisions

SPECIFICATION FOR PARROT ROW WIREMESH						
REQUIREMENT	PURPOSE	SANS	STEEL STRENGTH	ZINK COATING	MIN DIAMETER	REMARKS
Replacement of fence with small aperture fence	Prevent visitors feeding parrots and other birds from entering the enclosure.	SANS 10244	Mild steel (Lightly Galvanised)	Class D	1.6 mm	Welded wire mesh with 13x25 mm opening
			Mild steel (Lightly Galvanised)	Class D	2.0 mm	Welded wire mesh with 25x50 mm opening
Permanent Replacement of top roof cover with smaller aperture	Keep other birds out of the enclosure.	SANS 10244	Mild steel (Lightly Galvanised)	Class D	1.6 mm	Welded wire mesh with 13x25 mm opening
			Mild steel (Lightly Galvanised)	Class D	2.0 mm	Welded wire mesh with 25x50 mm opening
Providing moveable shade net cover	Extra protection to Prevent bird droppings from entering parrots' row during periods of high dropping	---	---	---	---	Shading nets (see notes bellow table)
Painting and repair of steel structure	Corrosion Prevention	---	---	---	---	All steel mesh to be coated with PVC/powder coat prior to installation (mat

						black colour, must be zoo friendly).
	Corrosion Prevention	---	---	---	---	Repair or replace all damaged steel members, sand and apply corrosion protection (mat black paint, must be zoo friendly)

Notes:

Install shade netting at 200 mm above the roof mesh out of the parrot's reach, ensure this distance will be maintained for the lifespan of the shade netting.

Reinstate all area post repairs/constructions.

PART C: THE CONTRACT
Part C4: Site Information

PROJECT TITLE:	APPOINTMENT OF A CONTRACTOR FOR THE CONSTRUCTION OF VARIOUS INFRASTRUCTURE PROJECTS, INCLUDING INSTALLATION OF BIOSECURITY MEASURES AND RENOVATIONS TO ANIMAL ENCLOSURES, FOR THE SOUTH AFRICAN NATIONAL BIODIVERSITY INSTITUTE (SANBI) AT THE NATIONAL ZOOLOGICAL GARDEN IN PRETORIA
CONTRACT NO:	**SANBI: NZG412/2022**

C4.1. General Site Information

The proposed construction is to take place within the National Zoological Garden in Pretoria.

C4.2. Annexure F

OCCUPATIONAL HEALTH AND SAFETY SPECIFICATION FOR CONTRACTORS WHO ARE ON CONTRACT WITH SANBI

C4.2.1 Scope

This specification establishes general requirements to enable SANBI and the Contractors to satisfy the requirements of Occupational Health and Safety Act, 1993 (Act No. 85 of 1993) and the Construction Regulations, 2014 as amended.

The Construction Regulations, 2014, require an Employer to stop any Contractor from executing construction work which is not in accordance with the Contractor's health and safety plan for the site or which poses to be a threat to the health and safety of persons.

This specification establishes generic health and safety requirements for health and safety as stated in the scope of work associated with a contract and

- provides the overarching framework within which the Contractor is required to demonstrate compliance with certain requirements for occupation health and safety established by the Occupational Health and Safety Act of 1993;
- establishes the manner in which the Contractor is to manage the risk of health and safety incidents in the execution of the contract; and
- establishes the manner in which the Employer's health and safety agent will interact with the Contractor.

C4.2.2 Requirements

C4.2.2.1 General requirement

The Contractor shall:

- create and maintain a safe and healthy work environment,
- execute the works in a manner that complies with all the requirements of the Act and all its associated regulations, and in so doing, minimize the risk of incidents occurring; and
- respond to the notices issued by the SANBI's Health and Safety Agent as follows:
    - Improvement Notice: improve health and safety performance over time so that repeat notices are not issued;
    - Contravention Notice: rectify contravention as soon as possible;
    - Prohibition Notice: terminate affected activities with immediate effect and only recommence activities when it is safe to do so.

Any incident occurring as a result of the contractors 'negligence which may affect SANBI employees will be claimed against the contractor.

C4.2.3 Administration

C4.2.3.1 Application and Notification of intention to commence construction work

C4.2.3.1.1 Application for construction work permit

A client who intends to have construction work carried out, must at least 30 days before that work is to be carried out apply to the provincial director in writing for a construction work permit to perform construction work if the intended construction work will:

- exceed 180 days;
- will involve more than 1800 person days of construction work; or
- the works contract is of a value equal to or exceeding thirteen million rand or Construction Industry Development Board (CIDB) grading level 6.

An application must be done in a form similar to Annexure 1 in the Regulation and a site-specific number assigned by the Provincial Director must be displayed on site.

C4.2.3.1.2 **Notification of construction work**

A contractor who intends to carry out any construction work other than work contemplated in regulation 3(1), must at least 7 days before that work is to be carried out notify the provincial director in writing in a form similar to Annexure 2 if the intended construction work will:

- include excavation work;
- include working at a height where there is risk of falling;
- include the demolition of a structure; or
- include the use of explosives to perform construction work.

The Contractor shall ensure that no work commences on an electrical installation which requires a new supply or an increase in electricity supply before the person who supplies or contracts or agrees to supply electricity to that electrical installation has been notified of such work.

The Contractor shall ensure that no asbestos work is carried out before the Provincial Director of the Department of Labour has been notified in writing.

C4.2.3.2 **Copy of the Act**

The Contractor shall ensure that a copy of the Act and relevant regulations is available on site for inspection by any person engaged in any activity on the site.

Good standing with the compensation fund or a licensed compensation insurer
The Contractor shall, before commencing with any works on the site, provide the SANBI with proof of good standing with the compensation fund or with a licensed compensation insurer.

C4.2.3.3 **Emergency procedures**

The Contractor shall submit for acceptance to the SANBI 's Health and Safety Agent an emergency procedure which include but are not limited to fire, spills, accidents to employees, exposure to hazardous substances, which:

- identifies the key personnel who are to be notified of any emergency;
- sets out details including contact particulars of available emergency services; and
- the actions or steps which are to be taken during an emergency.

The Contractor shall within 24 hours of an emergency taking place notify the SANBI's Health and Safety Agent in writing of the emergency and briefly outline what happened and how it was dealt with.

C4.2.3.4 Health and safety file

The Contractor shall maintain on site a health and safety file which contains copies of the following;

C4.2.3.4.1 Documents required before the contractor commences with construction activities

- the Contractor's health and safety policy, signed by the chief executive officer, which outlines the Contractor's objectives and how they will be achieved and implemented by the Contractor
- the notification made to the Provincial Director of Labour, and if relevant, the notification of the person who supplies or contracts or agrees to supply electricity to that electrical installation;
- the letters of appointment, as relevant, of the construction supervisor for the site in respect of construction works covered by the Construction Regulations and the registered person responsible for the electrical installation covered by the Electrical Installations Regulations;
- a copy of the certificate of registration of the registered person responsible for the electrical installation covered by the Electrical Installations Regulations where applicable;
- the approval of the design of the part of an electrical installation which has a voltage in excess of 1 kV by a person deemed competent in terms of the Electrical Installations Regulations;
- proof of registration of the electrical contractor who undertakes the electrical installation in terms of the Electrical Installations Regulations where applicable;
- the preliminary hazard identification undertaken by a competent person;
- the organogram which outlines the roles and responsibilities of the construction supervisor's assistants and safety officers; and
- the contractor's health and safety plan;
- the emergency procedures;
- the procedure for the replacement of lost, stolen, worn or damage personal protective clothing and
- proof that the contractor is registered and in good standing with the compensation fund or with a licensed compensation insurer;

C4.2.3.4.2 Documents required after construction activities have commenced

- the letters of appointments, if relevant, of:
  - persons who are required to assist the construction supervisor;
  - safety officers;
  - health and safety representatives;
  - replacement construction supervisor, and
  - assistants of construction supervisor.
- any revisions to the organogram which outlines the roles and responsibilities of the construction supervisor's assistants and safety officers;
- each and every subcontract agreement;
- proof that every subcontractor is registered and in good standing with the compensation fund or with a licensed compensation insurer;
- proof of all subcontractor's induction training whenever it is conducted;
- copies of the minutes of the Contractor's subcontractors health and safety meetings;

- copies of each of the Contractor's subcontractors' health and safety policy, signed by the Chief executive officer, which outlines the Contractor's objectives and how the will be achieved and implemented by the Contractor;
- the health and safety plans of all the Contractor's subcontractors who are required to provide such plans;
- a comprehensive and updated list of all the subcontractors employed on site by the contractor, indicating the type of work being performed by such sub-contractors;
- the outcomes of the monthly audits for compliance with the approved health and safety plan of each and every sub-contractor working on the site;
- any report made to an inspector by the health and safety committee;
- the minutes of all health and safety meetings and any recommendations made to the Contractor by the health and safety committee;
- the findings of all audit reports made regarding the implementation of the Contractor's or a subcontractor's health and safety plan;
- the inputs of the safety officer, if any, into the health and safety plan;
- details of induction training conducted whenever it is conducted including the list of attendees;
- proof of the following where suspended platforms are used:
    - a certificate of system design issued by a professional engineer, professional certificated engineer or a professional engineering technologist;
    - proof of competency of erectors;
    - proof of compliance of operational design calculations with requirements of the system design certificate;
    - proof of performance test results;
    - sketches indicating the completed system with the operational loading capacity of the platform;
    - procedures for and records of inspections having been carried out;
    - procedures for and records of maintenance work having been carried out;
    - proof that the prescribed documentation has been forwarded to the provincial director;
- letters of appointments for competent persons to supervise the activities which law requires to be so supervised;
- A copy of risk assessments made by competent person;
- records of the register of inspections made by a competent person immediately before and during the placement of concrete or any other load on formwork;
- the names of the first aiders on site and copies of the first aid certificates of competency;
- the names of the persons the persons who are in possession of valid certificate of competency in first aid and copies of such certificates;
- details of all incidents together with the Contractor's report on such incident; and
- the record of inspections carried out by the designers of structures to ensure compliance with designs.

The health and safety file shall be made available for inspection by any inspector, subcontractor, the Project Manager, the SANBI's Health and Safety Agent or employee of the Contractor upon the request of such persons.

The Contractor shall hand over the health and safety file to the SANBI's Health and Safety Agent upon completion of the contract and if relevant, a certificate of compliance accompanied by a test report for the electrical installation in accordance with the provisions of the Electrical Installation Regulations.

C4.2.3.5 Health and safety committee

The Contractor shall convene health and safety meetings whenever more than two health and safety representatives have been appointed for the site. These meetings shall be attended by all health and safety representatives and persons nominated by the Contractor. Such meetings shall be convened at least once every month to:

- make recommendations to the Contractor regarding any matter affecting the health or safety of persons on the site; and
- discuss any incident on the site in which or in consequence of which any person was injured, became ill or died.

The Contractor shall consult with the health and safety committee on the development, monitoring and review of the risk assessment.

The Contractor shall ensure that minutes of the health and safety committee meetings are kept.

SANBI Health and Safety Agent shall be invited to attend such meetings as an observer.

C4.2.3.6 Inspections, formal enquires and incidents

The Contractor shall inform the relevant safety representative:

- beforehand of inspections, investigations or formal inquiries of which he has been notified by an inspector and
- as soon as reasonably practicable of the occurrence of an incident on the site.

The Contractor shall record all incidents and notify the SANBI's Health and Safety Agent of any incident, except in the case of a traffic accident on a public road, as soon as possible after it has occurred and reports such incidence to an inspector.

The Contractor shall investigate all incidents and issue the SANBI's Health and Safety Agent with copies of such investigations.

C4.2.3.7 Personal protective equipment and clothing

The Contractor shall ensure that:

- all workers are issued with the necessary personal protective clothing;
- all workers are identifiable at all times by having the company for which they work for printed on the back or front of their overalls; and
- clear procedures are in place for the replacement of lost, stolen, worn or damage personal protective clothing.

C4.2.4 Appointments

C4.2.4.1 Health and safety representatives

The Contractor shall appoint in writing one health and safety representative for every 50 employees working on the site, whenever there are more than 20 employees on the site, to:

- review the effectiveness of health and safety measures;
- identify potential hazards and potential major incidents;
- in collaboration with his employer, examine the causes of incidents;
- investigate complaints by any employee of the Contractor relating to that employee's health or safety on the site;
- make representations to the Contractor on matters arising from a), b), c) or d) or on general matters affecting the health or safety of the employees at the workplace;
- inspect the site with a view to, the health and safety of employees, at regular intervals;
- participate in consultations with inspectors at the workplace and accompany inspectors on inspections of the workplace; and
- participate in any internal health or safety audit.

The Contractor shall provide the health and safety representatives with the necessary assistance, facilities and training to carry out the functions established in 4.3.1

C4.2.4.2 Appointment of construction supervisor and safety officers

The Contractor shall, prior to commencing the work, appoint a full-time competent employee in writing as the construction supervisor for the site, with the duty of supervising the performance of the work falling within the scope of the contract and may appoint one or more competent employees to assist the appointed construction supervisor.

The Contractor may, having considered the size of the project, the degree of dangers likely to be encountered or the accumulation of hazards or risks on the site, appoint a full time or part-time construction safety officer in writing, who has in the Contractor’s opinion the necessary competencies and resources, to assist the Contractor in the control of all safety related aspects on the site.

The Contractor shall compile and maintain an organogram which outlines the roles and responsibilities of the construction supervisor’s assistants and safety officers.

C4.2.4.3 Competent persons

The Contractor shall appoint in writing competent persons to supervise or inspect, as relevant, any of the following:

- formwork and support work operations;
- excavation work;
- demolition work;
- scaffolding work operations;
- suspended platform work operations;
- material hoists;
- operation of batch plants;

- explosive power tools;
- vehicles and mobile equipment;
- fire equipment; and
- the stacking and storage of articles on the site.

The Contractor shall appoint in writing competent persons to:

- induct employees in health and safety; and
- prepare a fall protection plan.

C4.2.5 Creating and maintaining a safe and healthy work environment

C4.2.5.1 General

The Contractor shall with respect to the site and the construction works that are contemplated:

- cause a preliminary hazard identification to be performed by a competent person before commencing any physical construction activity;
- evaluate the risks associated with such work constituting a hazard to the health and safety of such employees and the steps that need to be taken to comply with the Act; and as far as is reasonably practicable, prevent the exposure of such employees to the hazards concerned or, where prevention is not reasonably practicable, minimize such exposure.

The Contractor shall ensure that:

- all reasonably practicable steps are taken to prevent the uncontrolled collapse of any new or existing structure or any part thereof, which may become unstable or is in a temporary state of weakness or instability due to the carrying out of construction work;
- no structure or part of a structure is loaded in a manner which would render it unsafe; and
- account of information, if any, provided by the designer of the structure is taken into account in the risk assessment;

Note: The information provided by the designer should outline known or anticipated dangers or hazards relating to the works and make available all information required for the safe execution of the work. It should provide as relevant, geotechnical information (or make reference to reports provided in the site information), the loading the structure is designed to withstand, the methods and sequence of construction.

The Contractor shall carry out regular inspections and audits to ensure that the works are being performed in accordance with the requirements of this specification

C4.2.5.2 Risk assessment

The Contractor shall before the commencement of any work on site and during construction work, cause a risk assessment to be performed by a competent person appointed in writing. Such an assessment shall as a minimum:

- identify the risks and hazards to which persons may be exposed to;
- analyse and evaluate the identified risks and hazards;
- document a plan of safe work procedures, including the use of any personal protective equipment or clothing and the undertaking of periodic “toolbox talks” or inductions before undertaking hazardous work, to mitigate, reduce or control the risks and hazards that have been identified;

- provide a monitoring plan; and
- provide a review plan.

C4.2.5.3 **Health and safety plans**

The Contractor shall prior to commencing the works to which this specification applies, submit to SANBI's Health and Safety Agent for approval a suitable and sufficiently documented health and safety plan, based on this specification and the risk assessment that is conducted.

The health and safety plan must be specific to the current project and shall as a minimum provide:

- the information about hazards associated with the task to be performed; and
- an outline of the manner in which the Contractor intends complying with the requirements of this specification.
- The arrangements to ensure the safety of all SANBI staff affected by the activities of the project/work.
- The manner in which hazards will be communicated to all staff/including SANBI employees.

C4.2.5.4 **Responsibilities towards employees and visitors**

The Contractor shall as far as is reasonably practicable, cause every employee to be made conversant with the hazards to his health and safety attached to any work which he has to perform, any article or substance which he has to produce, process, use, handle, store or transport and any plant or machinery which he is required or permitted to use, as well as with the precautionary measures which should be taken and observed with respect to those hazards or safe work procedures. Safety for SANBI employees must be considered throughout the project life cycle.

The Contractor shall provide suitable on-site signage to alert workers and visitors to health and safety requirements. Such signage shall include but not be limited to:

- unauthorized entrance prohibited;
- signage to indicate what personal protective equipment is to be worn; and
- activity related signs.

The Contractor shall not permit any person who is or who appears to be under the influence of intoxicating liquor or drugs, to enter or remain at a workplace.

C4.2.6 Subcontractors

The Contractor may only subcontract work in terms of a written subcontract and shall only appoint a subcontractor should he be reasonably satisfied that such a subcontractor has the necessary competencies and resources to safely perform the work falling within the scope of the contract.

The Contractor shall provide any sub-contractor who is submitting a tender or appointed to perform a sub-contract falling within the scope of the contract, with the relevant sections of this specification and any work specific information which might be pertinent to the sub-contract.

C4.2.7 First aid, emergency equipment and procedures

The Contractor shall where more than five employees are employed at a workplace, provide a first aid box or boxes at or near the workplace which shall be available and accessible for the treatment of injured persons at that workplace. Such first aid boxes shall contain suitable first aid equipment.

The Contractor shall ensure that where there are more than 10 employees employed on the site that for every group of up to 50 employees at that workplace, at least one person is readily available during normal working hours, who is in possession of a valid certificate of competency in first aid.

C4.2.8 Facilities for workers

The Contractor shall provide and keep clean and fit for use at or within reasonable access of the site:

- at least one shower facility for every 15 workers
- at least one sanitary facility for every 30 workers;
- changing facilities for each sex; and
- sheltered eating areas.

2.5.4.2 A contractor shall provide reasonable and suitable living accommodation for the workers at construction sites which are remote from their homes and where adequate transportation between the site and their homes, or other suitable living accommodation, is not available

C4.2.9 Waste management

Construction will result in waste generation although in different scales depending on the nature and size of the project.
The goal for construction waste management is primarily the reduction of waste generated. Waste reduction is the responsibility of all on site, as it relates to materials procurement, handling, storage and use. Waste generated during construction will be reused, recycled or disposed to landfill.

Waste collection during building works will be appropriately managed through the staged nature of construction and the use of known quantities of materials. The majority of recyclable material that could be recovered during construction is likely to be off cuts and discards of concrete reinforcement (steel), metal off cuts, drainage pipes, telecommunication and electrical cabling, plastics, paint and timber.
No uncontrolled hazardous materials or dangerous goods will be stored on site.
Principal contractor will be required to provide waste management plan before construction work commences.

C4.2.10 Points to remember - Legal

C4.2.10.1 **Requirements**

- Application for construction work permit
- Notice of construction work
- Letter of good standing from the Department of Labour/ Insurance
- Risk assessment and safe working procedures
- Appointment letter of Principal contractor and other legal appointments
- Health and safety plan
- Valid medical certificates of fitness for employees
- Fall protection plan
- Health and safety inductions.
- Notice boards and display of site specific number assigned to the project.
- Management of plant & Noise
- Management of premises

- Management of Plant, labour & materials on site
- Management of safety file

C4.3. Annexure G

GENERAL ENVIRONMENTAL SPECIFICATIONS

Index to Environmental Specifications

Clause	Description
E1	Location of camp and depot
E2	Demarcation of the site
E3	Refuse
E4	Protection of fauna and flora
E5	Defacement of natural features
E6	Protection of archaeological and palaeontological Sites
E7	Effluent and storm-water management
E8	Run off from construction camps
E9	Discharge of construction water
E10	Servicing/fuelling of construction equipment
E11	Fuels and chemicals
E12	Dust control
E13	Noise control
E14	Materials use, handling, storage and transport
E15	Use of cement/concrete
E16	Fuel storage and use
E17	Hazardous materials
E18	Transport of materials outside the site
E19	Fire
E20	Removal of topsoil
E21	Stabilisation of steep slopes
E22	Site Rehabilitation
E23	Landscaping and preparation for re-vegetation

E1 Location of camp and depot

The Contractor's Camp and Materials Storage Area shall be located at a position approved by the Responsible Person. No site staff other than security personnel shall be housed on site. The Contractor's Camp and Materials Storage Area shall be kept neat and tidy and free of litter.

E2 Demarcation of the site

It is important that activities are conducted within a limited area to facilitate control and to minimise the impact on the existing natural environment, existing tenants and other construction activities in the vicinity and public thoroughfares.

The Contractor shall demarcate the boundaries of the site in order to restrict his construction activities to the site. The method of demarcation and the location of the demarcated area shall be determined by the Contractor and approved by the Responsible Person before any work being undertaken. The Contractor shall ensure that all plant, labour and materials remain within the boundaries of the site. Failure to do so may result in the Contractor being required to fence the boundaries of the site at his/her own expense to the satisfaction of the Responsible Person.

If additional areas (e.g. for lay down, rest areas) are required, these must be approved in writing by the Responsible Person. The Contractor is advised that it may take approximately one week to obtain such permission from the Responsible Person.

Suitable temporary fencing may need to be erected during construction to minimise the risk of injury to the public, and animals.

E3 Refuse

Refuse refers to all solid waste, including construction debris (e.g. wrapping materials, timber, cans etc.) waste and surplus food, food packaging etc.

The Contractor shall institute an on-site waste management system that is acceptable to the Responsible Person to prevent the spread of refuse within and beyond the site. The Contractor is reminded that wind velocities on the construction site can be high.

All waste shall be collected and contained immediately. The Contractor shall institute a weekly clean up of the site if so instructed by the Responsible Person. This daily/weekly clean up shall be for the Contractor's account.

The Contractor shall not dispose of any waste and/or construction debris by burning or burying. The use of waste bins and skips is recommended. The bins shall be provided with lids and an external closing mechanism to prevent their contents from blowing out. The Contractor shall ensure that all waste is deposited by his employees in the waste bins for removal by the Contractor. Bins shall not be used for any purposes other than waste collection and shall be emptied on a regular basis. All waste shall be disposed of off site at approved landfill sites.

Hazardous waste, including waste oil and other chemicals (e.g. paints, solvents) shall be stored in (an) enclosed area(s), and shall be clearly marked. If deemed necessary by the Responsible Person, the Contractor shall obtain the advice of a specialist waste expert concerning the storage of hazardous waste. Such waste shall be disposed of off site by a specialist waste contractor, at a permitted hazardous waste disposal site.

E4 Protection of fauna and flora

All fauna within and around the site shall be protected. Birds and animals shall not be caught or killed by any means, including poisoning, trapping, shooting or setting of snares. Offenders may be prosecuted in terms of the Animals Protection Act 71 of 1962.

E5 Defacement of natural features

Defacement of any features outside of the construction site shall not occur without the prior written permission of the Responsible Person. Any features defaced by the Contractor shall be restored to the satisfaction of the Responsible Person.

E6 Protection of archaeological and paleontological Sites

If any possible palaeontological /archaeological material is found during excavations, the Contractor shall stop work immediately and inform the Responsible Person. The Responsible person will inform the South African Heritage Resource Agency (SAHRA) and arrange for a palaeontologist/archaeologist to inspect, and if necessary excavate, the material, subject to acquiring the requisite permits from the National Monuments Council. Costs incurred will be for the Employer's account.

E7 Effluent and storm-water management

The Contractor must ensure that pollution of the ground or surface water does not occur as a result of site activities. Pollution could result from the accidental release of contaminated run-off from construction camps, discharge of contaminated construction water, chemicals, oils, fuels, sewage, run-off from stockpiles, solid waste, litter, etc.

E8 Run off from construction camps

The Contractor shall ensure that polluted run-off (excluding silt "pollution"), such as run-off from construction camps where equipment is cleaned and/or serviced, fuel stores, workshops, etc. is not discharged overland. The Contractor shall erect an earth/brick berm 0,5 m high around such areas and shall collect all run-off from these areas and store it in a conservancy tank for removal from the site. The Contractor shall ensure that silt-laden water is not discharged directly into any surface watercourses (i.e. vleis, etc.), and shall take suitable measures to prevent this.

Natural run-off shall be diverted away from any camps towards the storm-water drains where these are available. Special care must be taken in areas susceptible to erosion, e.g. steep slopes. The Contractor shall ensure that excessive quantities of sand, silt and silt-laden water do not enter the storm-water drain system, or any surface watercourse. The Contractor shall take appropriate measures, e.g. the erection of silt traps, or drainage retention areas, to prevent silt and sand entering drainage or watercourses. Any partial or complete blockage of the storm-water drainage system shall be cleared by the Contractor at his / her own expense.

E9 Discharge of construction water

Construction water refers to all water dirtied as a result of construction activities.

The Contractor may discharge silt laden water overland and allow this water to filter into the ground. However, s/he shall ensure that he does not cause erosion as a result of any overland discharge.

The Contractor may not discharge cement-laden water overland, i.e. washings from trowels, wheelbarrows and the like.

Trucks delivering concrete shall not wash the trucks or the chutes on the site. All washing operations shall take place off site at a location where wastewater can be disposed of in the correct manner.

E10 Servicing/fuelling of construction equipment

Servicing and fuelling should preferably occur off site.

However, if these activities occur on site, the Contractor shall ensure that all servicing of vehicles and equipment takes place in designated areas agreed upon by the Responsible Person. All waste shall be

collected and disposed of off site at an appropriately licensed landfill site. All equipment that leaks onto the ground shall be repaired immediately or removed.

Similarly, no vehicles or machines shall be refuelled on site except at designated refuelling locations, unless otherwise agreed with the Responsible Person. The Contractor shall not change oil or lubricants anywhere on site except at designated locations, except if there is a breakdown or an emergency repair. In such instances, the Contractor shall ensure that he has Drizit pads (or equivalent) and/or drip trays available to collect any oil, fluid, etc.

E11 Fuels and chemicals

The Contractor shall take all reasonable precautions to prevent the pollution of the ground and/or water resources by fuels and chemicals as a result of his activities.

The Contractor shall keep the necessary materials and equipment on site to deal with ground spills of any of the materials used or stored on site.

The Contractor shall ensure that no oil, petrol, diesel, etc. is discharged onto the ground. Pumps and other machinery requiring oil, diesel, which is intended to remain in one position for longer than two days shall be placed on drip trays. The drip trays shall be emptied regularly and the contaminated water disposed of off site at a facility capable of handling such wastewater. Drip trays shall be cleaned before any possible rain events that may result in the drip trays overflowing, and before long week ends and holidays.

The Contractor shall remove all oil-, petrol-, and diesel-soaked sand immediately and shall dispose of it as hazardous waste.

Should the Responsible Person/ECO and/or the relevant authorities deem it necessary to institute a programme for the removal of contaminated ground resulting from the non-compliance of the controls detailed above, these costs will be for the Contractor's account. Remedial action shall be approved by the ECO and relevant authorities, if appropriate.

E12 Dust control

The Contractor shall be responsible for the continued control of dust arising from his/her operations, through measures including, but not limited to, spraying of water on bare areas, rotovating straw bales into the soil surface and the scheduling of dust-generating activities to times when wind velocity is low. Overhead sprayers shall not be used in windy conditions, due to water loss through evaporation. The use of water carts is preferred.

The Contractor shall inform the Responsible Person 48 hours in advance of anticipated “unavoidable” dust-generating activities. The Responsible Person and/or ECO may inform adjacent land users, tenants and communities about the possibility of dust pollution, and the approximate duration of the problem.

E13 Noise control

The Contractor shall take all reasonable precautions to minimise noise generated on site as a result of his operations, especially when working in areas or on activities that may impact on neighbouring land users.

The Contractor shall comply with the applicable regulations with regard to noise.

The Contractor shall inform the Responsible Person 48-hours in advance of anticipated “unavoidable” noise-generating activities. The Responsible Person and/or Environmental Officer may inform adjacent

land users, tenants and communities about the possibility of noise pollution and the approximate duration of the problem.

E14 Materials use, handling, storage and transport

Procedure for material handling must be discussed with and approved by the Responsible Person prior to commencement of this activity.

E15 Use of cement/concrete

The Contractor is advised that cement and concrete are regarded as highly hazardous to the natural environment on account of the very high pH of the material, and the chemicals contained therein. Therefore the Contractor shall ensure that:

- concrete is mixed on mortar boards, and not directly on the ground;
- visible remains of concrete, either solid, or from washings, are physically removed immediately and disposed of as waste. Washing visible signs into the ground is not acceptable; and
- all aggregate is also removed.

E16 Fuel storage and use

Tanks containing fuels shall have lids and shall remain firmly shut. Only clean, empty tanks may be stored on the bare ground. Fuel stores shall be placed on a bunded sealed base - the bunds shall have a volume of 110% of the volume of the largest tank in the storage area. Any waste-water or spilled fuel collected within the bund shall be disposed of as hazardous waste.

The Contractor shall take all the necessary precautions to prevent fires or spills. No smoking shall be allowed in the vicinity of the fuel stores. Failure to adhere to this specification shall be cause for a spot fine being imposed on the offender.

The Contractor shall ensure that there is adequate fire-fighting equipment at the fuel stores.

E17 Hazardous materials

The Contractor shall comply with all relevant national, regional and local legislation with regard to the transport, use and disposal of hazardous materials. If necessary, the Contractor shall obtain the advice of the manufacturer with regard to the safe handling of hazardous materials. Any claims against the Contractor shall be for his/her account.

The Contractor shall provide the Responsible Person with a list of hazardous substances on site, together with storage procedures for these materials.

The Contractor shall ensure that there is an emergency procedure to deal with accidents and incidents (e.g. spills) arising from hazardous substances. The Contractor shall report major incidents (spills in excess of 50 litres) to the Responsible Person immediately.

The Contractor shall maintain a register of spills or incidents involving hazardous materials, as well as measures taken.

The Contractor shall ensure that information on all hazardous substances is available to all personnel on site. The Contractor shall furthermore be responsible for the training of all personnel on site who will be handling the material about its proper use, handling and disposal.

E18 Transport of materials outside the site

The Contractor shall comply with all the applicable local, regional and national by-laws with regard to road safety and the transport of materials, especially hazardous and/or toxic materials. Any claims against the Contractor shall be for his account.

The Responsible Person shall provide the Environmental Officer with a schedule of the proposed transportation of significant quantities of hazardous material onto the site, before commencing work on site. The Environmental Officer may request further details or notifications of specific material movements if considered necessary.

E19 Fire

The Contractor shall take all the necessary precautions to ensure that fires are not started as a result of his/her activities on site, and shall also comply with the requirements of the Occupational Health and Safety Act 85 of 1993.

No open fires shall be permitted on or off site. Closed fires or stoves shall only be permitted at designated safe sites in the construction camps. Fires shall also not be permitted near any potential sources of combustion, such as fuel stores, stockpiles of plant material etc.

The Contractor is advised that sparks generated during welding, cutting of metal or gas cutting can cause fires. Every possible precaution shall therefore be taken when working with this equipment near potential sources of combustion. Such precautions include having an approved fire extinguisher immediately available at the site of any such activities.

The Contractor shall be liable for any expenses incurred by any organisations called to assist with fighting fires, and for any costs relating to the rehabilitation of burnt areas.

E20 Removal of topsoil

Following removal of vegetation from the site, all topsoil shall be removed (up to a maximum of 30-cm depth) and stock-piled for re-use in subsequent rehabilitation and landscaping activities. The stockpiles shall not be higher than 2-m in order to minimise composting. The stockpiles of topsoil shall be located in an area agreed with the Responsible Person.

E21 Stabilisation of steep slopes

The disturbance of steep slopes, for example by the removal of vegetation, may result in slope instability and erosion by rain and surface run off. The Contractor shall ensure that slopes that are disturbed during construction are stabilised to prevent erosion occurring. Where re-vegetation of slopes is undertaken, this shall be in accordance with the specification provided in EP6.

Slopes that are susceptible to accidental damage during construction shall be protected to reduce the risk of disturbance.

Any erosion that does occur must be reinstated at the Contractor's cost.

E22 Site Rehabilitation

The Contractor shall be responsible for rehabilitating any areas cleared or disturbed for construction purposes that are to be incorporated into open space or buffer zones. The Contractor shall re-vegetate such areas in accordance with the specification provided below.

The Contractor shall stabilise, by straw rot ovation or other means, any areas that are cleared or disturbed for construction purposes which are not going to be incorporated into open space or buffer zones (i.e. areas that will be subsequently developed by another party).

All construction equipment and excess aggregate, gravel, stone, concrete, bricks, temporary fencing and the like shall be removed from the site upon completion of the work. No discarded materials of whatsoever nature shall be buried on the site or on any other land not owned by ACSA.

E23 Landscaping and preparation for re-vegetation

Areas that require reshaping shall be cut, filled and compacted so as to follow the contours of the surrounding landscape. Topsoil removed from the area initially shall be replaced. Care must be taken not to mix the topsoil with the subsoil during shaping operations. Should a crust form on the soil before re-vegetation is commenced, the Contractor shall, at his own cost, loosen the crust by scarifying to a depth of 150-mm.

C4.4. Annexure H

GEOTECHNICAL INFORMATION

GEOTHETA CONSULTING ENGINEERS AND SCIENTISTS

Proposed Ablution Facilities at the National Zoological Gardens of South Africa, Pretoria

GEOTECHNICAL INVESTIGATION REPORT

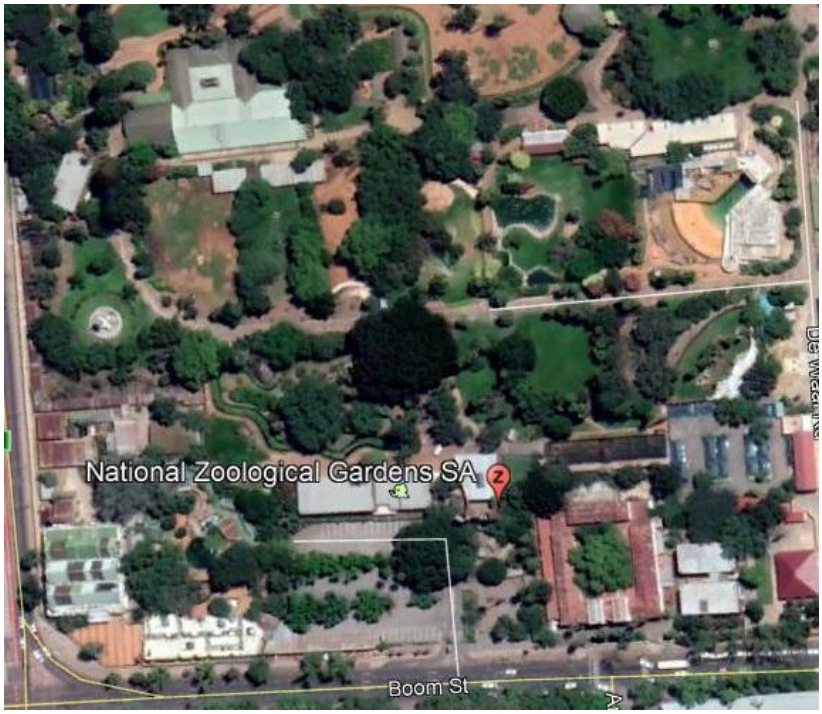

Projectneers Consulting
94 New Road
Midrand
1685

1904580/01 Oct 2019

Projectneers Consulting

94 New Road, Midrand, 1685

Geotechnical Investigation and report

Report Reference Number: 1904580/01

Revision date: Oct 2019

1. Executive Summary

Projectneers Consulting commissioned Geotheta (Pty) Limited to prepare a geotechnical investigation report for the proposed ablution facilities planned at the National Zoological Gardens of South Africa in Pretoria, Gauteng.

A near-surface geotechnical investigation was done and representative soil samples were retrieved.

The soils at the site comprise of fill, consisting of builder's rubble, underlain by reworked residual (silty sandy gravelly) underlain by residual Andesite.

Foundations can be constructed on the reworked residual material at a depth of 0.8 m. The base of the foundations should be ripped and re-compacted prior to casting of foundations. There should be minimal differential settlement on the site.

Foundation construction can be designed for 150kPa load bearing.

No groundwater seepage was encounter during the investigations. However the presence of the ferricrete could indicate the presence of a perched water level during the rainy season.

Sub-soil drainage needs to be constructed on site to protect the foundations from moisture ingress.

The reworked residual and residual material classify as LOW according to the Van Der Merwe activity diagram.

Material excavation will be classed as *soft* to *Intermediate*.

Excess material from the foundation excavations will be suitable as backfill.

2. Disclaimer

2.1 Data provided to Geotheta

The opinions expressed in this Report have been based on the information supplied to Geotheta (Pty) Ltd (Geotheta) by Projectneers Consulting. The opinions in this report are provided in response to a specific request from Tango's Consultants to do so. Geotheta has exercised all due care in reviewing the supplied information. Whilst Geotheta has compared key supplied data with expected values, the accuracy of the results and conclusions from the review are entirely reliant on the accuracy and completeness of the supplied data. Geotheta does not accept responsibility for any errors or omissions in the supplied information and does not accept any consequential liability arising from commercial decisions or actions resulting from them.

2.2 Data obtained by Geotheta

Opinions presented in this report apply to the site conditions and features as they existed at the time of Geotheta's investigations, and those reasonably foreseeable. These opinions do not necessarily apply to conditions and features that may arise after the date of this report, about which Geotheta had no prior knowledge nor had the opportunity to evaluate.

3. Statement of Geotheta Independence

Neither Geotheta nor any of the authors of this report have any material present or contingent interest in the outcome of this report, nor do they have any pecuniary or other interest that could be reasonably regarded as being capable of affecting their independence or that of Geotheta.

Geotheta has no beneficial interest in the outcome of the technical assessment being capable of affecting its independence.

Geotheta's fee for completing this report is based on its normal professional rates and/or fees plus incidental expenses. The payment of that professional fee or expense is not contingent upon the outcome of the report.

4. Table of Contents

1. Executive Summary 3
2. Disclaimer 4
2.1 Data provided to Geotheta 4
2.2 Data obtained by Geotheta 4
3. Statement of Geotheta Independence 4
4. Table of Contents 5
5. Introduction 6
6. Terms of reference 6
7. Scope of work 6
7.1 Site geotechnical investigation 6
7.2 Laboratory testing 6
7.3 Report 6
8. Site Location and Description 6
9. GEOLOGY 7
10. Engineering Geology 8
11. Method of Investigation 8
11.1 Desk study 8
11.2 Test Pit 8
11.3 Soil Sampling 9
11.4 Laboratory Testing 9
12. Results 9
12.1 Site soils 9
12.2 Laboratory Results 10
13. Discussion of results 10
13.1 Soil profiles 10
13.2 Construction material 10
13.3 Foundation conditions 10
13.4 Excavatability 10
14. Summary, conclusions and recommendations 10
15. References 12
Appendix A: Test Pit Profiles 14
Appendix B: Test Pit Photos 16
Appendix C: Laboratory Results 18

5. Introduction

5.1 Projectneers Consulting commissioned Geotheta (Pty) Limited to prepare a geotechnical investigation report for the proposed ablution facilities planned at the National Zoological Gardens of South Africa in Pretoria, Gauteng.

5.2 A near-surface geotechnical investigation was undertaken to measure upper soil conditions and to provide geotechnical parameters for the design of the surface infrastructure and to be able to specify the construction excavations.

5.3 The near-surface investigation comprised of a test pits and the retrieval of samples for laboratory testing. This was then analysed to determine the foundation conditions and soil classification.

5.4 The site investigation work commenced on 09 September 2019, and the laboratory testing results were received by 30 September 2018.

6. Terms of reference

6.1 Geotheta submitted proposal reference 1904580 – Projectneers – Zoological Gardens Geotech - P01 06 July 2019.

6.2 Based on the proposal, Projectneers Consulting appointed Geotheta on 20 September 2019.

7. Scope of work

The accepted scope of work is:

7.1 Site geotechnical investigation

7.2 This was done to determine the foundation geotechnical characteristics of the area:

7.2.1 Test Pits

7.2.2 A Tractor Loader Backhoe (TLB) excavator was deployed to site to excavate a test pit.

7.2.3 The test pit was profiled by an engineering geologist to determine the strata layers and soil characteristics. Soil samples were retrieved as necessary for laboratory testing.

7.3 Laboratory testing

The samples were sent to a SANAS certified geotechnical soils laboratory for testing and analysis. Foundation indicator tests were done.

7.4 Report

This geotechnical report was written.

8. Site Location and Description

8.1 The site is located at the main entrance to the Zoological Gardens in Boom Street, Pretoria (see Figure 1).

8.2 The proposed ablution facilities are located on the eastern side of the main gate and the area consists of a rock garden and boulders. Most of the boulders will have to be removed before the construction of the facilities.

8.3 There are two major services on the site location i.e. a 70mm electrical main ring cable (that was broken during the test pit excavation) and a grey water pipe. None

of the services is properly marked therefore care must be taken during the excavations of the foundations.

GEOTHETA CONSULTING ENGINEERS AND SCIENTISTS	Zoological Garden	1904580

Figure 1 : Location of the site

9. GEOLOGY

9.1 Figure 2, below, indicates the regional geology of the area.

9.2 From the 1:250 000 geological map 2528 Pretoria, the base rocks comprise Valium aged volcanic rock consisting of Andesite with agglomerate in places (Vha) from the Hekpoort Formation of the Pretoria Group.

9.3 During the investigation a layer of fill was encountered underlain by Medium Dense to Very Dense reworked residual material underlain by residual Andesite.

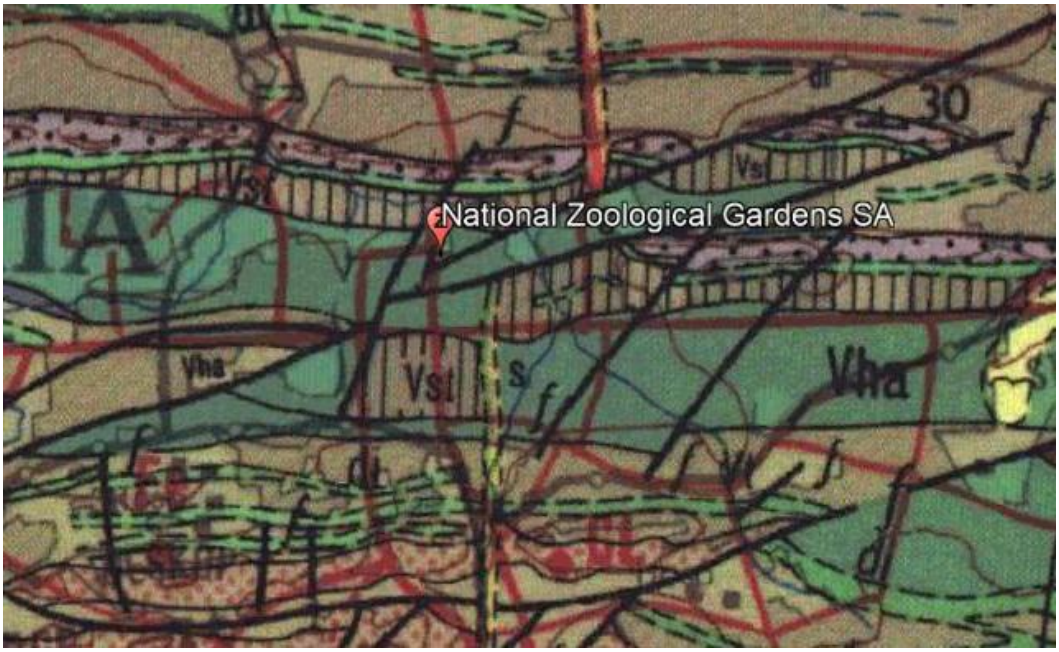

GEOTHETA CONSULTING ENGINEERS AND SCIENTISTS	Zoological Garden	1904580

Figure 2: Regional Geology

10. Engineering Geology

10.1 The influence of climate on weathering is expressed by the N-value (H.H. Weinert 1980). The most important is where N=5. Where N is more than 5, disintegration is dominant, and where N is less than 5, decomposition is dominant.

10.2 The Weinert N-value is 2.5 for this region, indicating that decomposition is the overriding process.

10.3 Weinert also mentions that where N is between 2 and 5, weathering profiles develop upwards from fresh rock to residual soil.

11. Method of Investigation

11.1 Desk study

11.1.1 The site location was submitted to the Council for Geosciences in Pretoria. It was confirmed that the site was most likely not underlain by dolomites.

11.1.2 The local geology was determined from the geological maps. The results of this study are discussed in section 11 and 12 above.

11.2 Test Pit

11.2.1 Due to the restricted access only one test pit was excavated. The test pit was directly east of the main entrance in an opening of the entrance wall.

11.2.2 The position of the test pit excavated is indicated on Figure 3.

GEOTHETA CONSULTING ENGINEERS AND SCIENTISTS	Zoological Garden	1904580

Figure 3: Test Pit Positions

11.2.3 The test pit was excavated with a Tractor Loader Backhoe (TLB) and the soil profile was logged according to the standard method of Jennings, Brink and Williams (1973). Test pit profile and photograph are included in Appendices A and B respectively.

11.3 Soil Sampling

11.3.1 Samples were taken from test pit TP 1 to determine the material classification and the soil parameters of the soil present on site.

11.4 Laboratory Testing

11.4.1 The retrieved sample was submitted to Civilab in Hennopspark, Centurion, for testing.

11.4.2 Foundation Indicators tests were conducted on the samples.

11.4.3 The laboratory test results are included as Appendix C.

11.4.4 The results are discussed below.

12. Results

12.1 Site soils

12.1.1 The soil profiles of the different test pits encountered on the site are as follows

Test Pit No	Rubble	Reworked residual	Residual Andesite	Test pit depth (m)
TP1	0.0 – 0.8	0.8 – 1.5	1.5 – 2.5	2.5 – EOH

12.2 Laboratory Results

12.2.1 The reworked residual material classified as silty sandy gravelly. The Plasticity Index is 16, the Liquid Limit 39 and the Linier Shrinkage 7.5. The value of the Grading Modulus is 2.16. The material should classify as a G6. The soil is LOW activity on the van der Merwe Activity Diagram.

12.2.2 The residual Andesite classified as clayey sandy silt. The Plasticity Index is 15, the Liquid Limit 37 and the Linier Shrinkage 7.5. The value of the Grading Modulus is 0.89. The material should classify as a G8. The soil is LOW - MEDIUM activity on the van der Merwe Activity Diagram.

13. Discussion of results

13.1 Soil profiles

13.1.1 The site is underlain by fill, consisting of builder's rubble, underlain by reworked residual (silty sandy gravelly) underlain by residual Andesite. The typical soil profiles present on site can be summarised as follows:

- 0.0 – 0.8 m Rubble
- 0.8 – 1.5 m Reworked Residual (Pedogenic)
- 1.5 – 2.5 m Residual Andesite.

13.1.2 No groundwater seepage was encounter during the investigations. However the presence of the ferricrete could indicate the presence of a perched water level during the rainy season.

13.2 Construction material

13.2.1 The reworked material tested should classify as a G6 and can be used as backfill.

13.3 Foundation conditions

13.3.1 The rubble should be removed down to 0.8 m and the foundations can be constructed on the reworked residual layer.

13.3.2 Slab on the ground can be used for foundation construction.

13.3.3 The base of the foundation should be ripped and re-compacted to form a uniform base for the foundations.

13.3.4 Maximum bearing capacity to be 150kPa.

13.3.5 The in-situ material tested to have a LOW to MEDIUM activity on the Van Der Merwe diagram. Therefore precautions must be taken to protect the foundations from moisture ingress.

13.4 Excavatability

13.4.1 The excavatability of the material on site was in the *Soft* range.

14. Summary, conclusions and recommendations

14.1 The site is underlain by fill, consisting of builder's rubble, underlain by reworked residual (silty sandy gravelly) underlain by residual Andesite.

14.2 During the fieldwork only 1 test pits was excavated using a TLB to determine the subsoil conditions due to restrictive access.

14.3 The excavatability of the material on site was *Soft*.

14.3.1 No groundwater seepage was encounter during the investigations. However the presence of the ferricrete could indicate the presence of a perched water level during the rainy season.

14.4 Therefore sub-surface drainage will have to be constructed to prevent the accumulation of water against the foundations

14.5 The foundations should also be protected from moisture ingress by constructing a concrete or paved apron around buildings and ensuring that all pipes are water tight.

14.6 Adequate storm water control needs to be implemented to direct the water away from the excavations and foundations.

14.6.1 Maximum bearing capacity to be 150kPa at a depth of 0.8 m.

14.6.2 Normal foundation can be used.

14.7 The base of the foundation should be ripped and re-compacted to form a uniform base for the foundations.

Prepared by

Jaco Bloem – Pr Sci Nat

Reviewed by

Ian Hammond Pr Eng

All data used as source material plus the text, tables, figures, and attachments of this document have been reviewed and prepared in accordance with generally accepted professional engineering and environmental practices.

15. References

15.1 WEINERT, HH. 1980. The natural road construction materials of southern Africa. Pretoria: Academica.

15.2 JENNINGS JE, BRINK ABA, and WILLIAMS AAB. 1973. Revised guide to soil profiling for civil engineering purposes in southern Africa, The Civil Engineer in South Africa, Jan 1973 Trans SAICE, Vol 15 No 1.

15.3 VAN DER MERWE, DH. 1964. The prediction of heave from the plasticity index and the percentage clay fraction of soils. The Civil Engineer in South Africa. June 1964, pp 103-107.

15.4 UNIFIED SOIL CLASSIFICATION SYSTEM. CALTRANS

APPENDICES

Appendix A: Test Pit Profiles

Projectneers Consulting
National Zoological Gardens, Pretoria

HOLE No: TP 1
Sheet 1 of 1

JOB NUMBER: 1904580

Scale 1:30

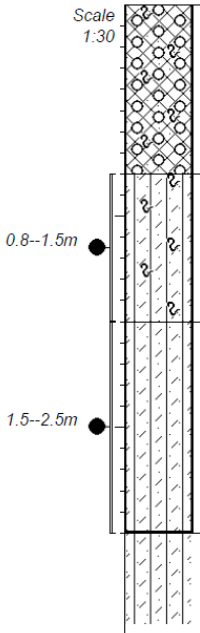

0.00	Moist, Red brown, MEDIUM DENSE, voided, SANDY GRAVEL with rubble and tree roots. FILL.
0.80	Moist, Red orange speckled black, MEDIUM DENSE to DENSE, intact, CLAYEY SANDY SILT with ferricrete nodules and roots. Pedogenic - Reworked Residual
1.50	Moist, Red streaked orange, DENSE, intact, CLAYEY SANDY SILT. Residual Andesite.
2.50	EOH.

NOTES

1) No Groundwater seepage.
2) No Refusal.
3) Disturbed Sample taken at 0.8--1.5m.
4) Disturbed Sample taken at 1.5--2.5m.

CONTRACTOR : V&S Cat Hire
MACHINE : JCB 3CX TLB
DRILLED BY :
PROFILED BY : J Bloem
TYPE SET BY : JB
SETUP FILE : STANDARD.SET

INCLINATION :
DIAM : TRENCH
DATE : 02.09.2019
DATE : 02.09.2019
DATE : 11/10/2019 09:04
TEXT : ..lot\JacoBloem\ZooTP1.txt

ELEVATION :
X-COORD :
Y-COORD :

HOLE No: TP 1

Appendix B: Test Pit Photos

TP1

Appendix C: Laboratory Results

144 Edward Street, Hennopspark, Centurion 0157
PO Box 7661, Centurion 0046
Tel: +27 (0)12 653 1818 Fax: +27 (0)12 653 0997
E-mail: adminhennops@civilab.co.za
Website: www.civilab.co.za

sanas T0661

Civilab

Civil Engineering Testing Laboratories

Client	:	GEOTHETA (PTY) LTD	Date Received:	02/09/2019
Project	:	Zoological Garden	Date Reported:	17/09/2019
Project No	:	2019-H-642	Page No. :	2 of 2

FOUNDATION INDICATOR

Laboratory Number		1 ◆	2 ■
Field Number		TP 1	TP 1
Client Reference			
Depth (m)		0.8 - 1.5	1.5 - 2.5
Position			
Coordinates	X		
	Y		
Description			
Aditional Information			
Calcrete / Crushed			
Stabilizing Agent			

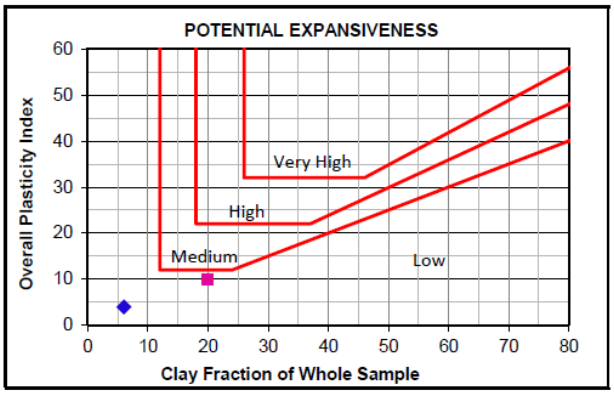

Moisture Content & Relative Density

Moisture Content (%)		
Relative Density (S.G.)		

Sieve Analysis (Wet Prep) — **SANS 3001 GR1**

Percentage Passing	100 mm	100	100
	75 mm	100	100
	63 mm	100	100
	50 mm	100	100
	37.5 mm	100	100
	28 mm	100	100
	20 mm	100	100
	14 mm	97	99
	5 mm	60	96
	2 mm	35	81
	1 mm	28	72
	0.425 mm	26	69
	0.250 mm	25	68
	0.150 mm	24	65
	0.075 mm	23	61
Grading Modulus		2.16	0.89

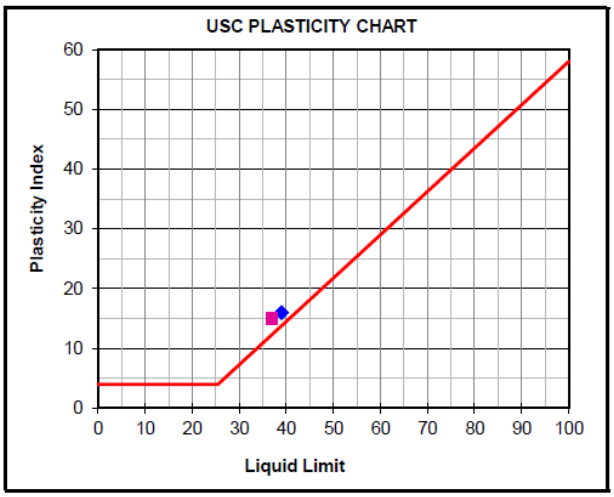

Hydrometer Analysis — **SANS 3001 GR3**

Percentage Passing	0.060 mm	20	55
	0.040 mm	16	45
	0.020 mm	13	38
	0.006 mm	9	26
	0.002 mm	6	20
Gravel	%	65	19
Sand	%	15	26
Silt	%	14	35
Clay	%	6	20

Note: An assumed S.G. may be used in Hydrometer Analysis calculations

Laboratory Number		1 ◆	2 ■
Atterberg Limits -425µ		**SANS 3001 GR10**	
Liquid Limit	%	39	37
Plasticity Index	%	16	15
Linear Shrinkage	%	7.5	7.5
Overall PI	%	4	10

Classifications

HRB (AASHTO)	A-2-6(0)	A-6(7)
Unified (ASTM D2487)	GC	CL
Weston Swell @ 1 kPa		

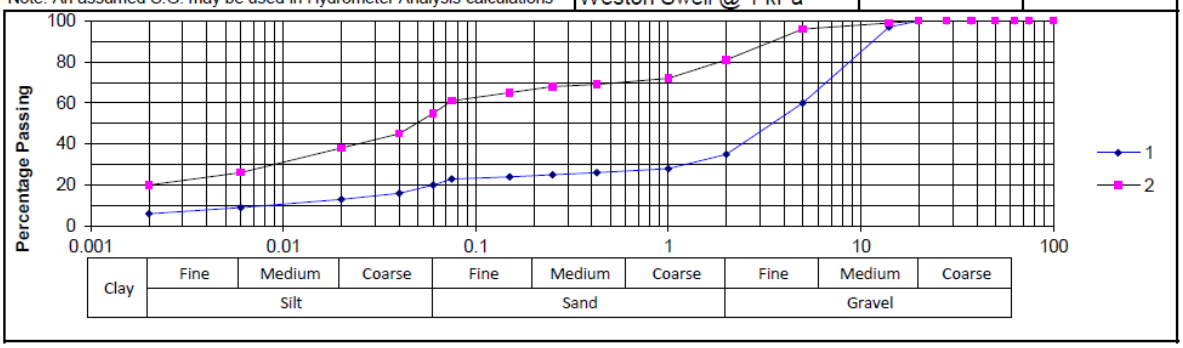

Geotheta Report Distribution Record

Report No.	1904580/01
Copy No.	Electronic

Name/Title	Company	Copy	Date	Authorised by
Brighton Tshuma	Projectneers	Electronic	11 Oct 2019	Ian Hammond

Approval Signature:

This report is protected by copyright vested in Geotheta (Pty) Ltd. It may not be reproduced or transmitted in any form or by any means whatsoever to any person without the written permission of the copyright holder, Geotheta.